VHF NAVIGATION AND COMMUNICATIONS RECEIVER

51X-2

ARC-73

INSTRUCTION BOOK

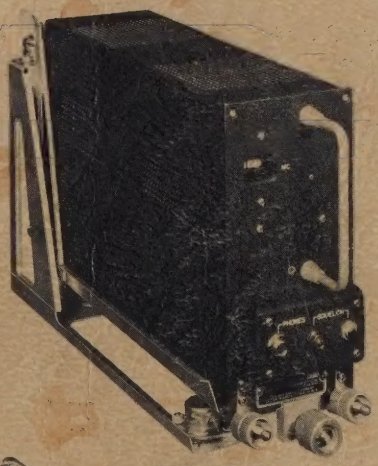

5000

COLLINS RADIO COMPANY

COLLINS

GUARANTEE

The equipment described herein is sold under the following guarantee:

Collins agrees to repair or replace, without charge, any equipment, parts, or accessories which are defective as to design, workmanship or material, and which are returned to Collins at its factory, transportation prepaid, provided

(a) Notice of the claimed defect is given Collins within one (1) year from date of delivery and goods are returned in accordance with Collins' instructions.

(b) Equipment, accessories, tubes, and batteries not manufactured by Collins or from Collins' designs are subject to only such adjustments as Collins may obtain from the supplier thereof.

(c) No equipment or accessory shall be deemed to be defective if, due to exposure or excessive moisture in the atmosphere or otherwise after delivery, it shall fail to operate in a normal or proper manner.

Collins further guarantees that any radio transmitter described herein will deliver full radio frequency power output at the antenna lead when connected to a suitable load, but such guarantee shall not be construed as a guarantee of any definite coverage or range of said apparatus.

The guarantee of these paragraphs is void if equipment is altered or repaired by others than Collins or its authorized service center.

No other warranties, expressed or implied, shall be applicable to any equipment sold hereunder, and the foregoing shall constitute the Buyer's sole right and remedy under the agreements in this paragraph contained. In no event shall Collins have any liability for consequential damages, or for loss, damage or expense directly or indirectly arising from the use of the products, or any inability to use them either separately or in combination with other equipment or materials, or from any other cause.

HOW TO RETURN MATERIAL OR EQUIPMENT. If, for any reason, you should wish to return material or equipment, whether under the guarantee or otherwise, you should notify us, giving full particulars including the details listed below, insofar as applicable. If the item is thought to be defective, such notice must give full information as to nature of defect and identification (including part number if possible) of part considered defective. (With respect to tubes we suggest that your adjustments can be speeded up if you give notice of defect directly to the tube manufacturer.) Upon receipt of such notice, Collins will promptly advise you respecting the return. Failure to secure our advice prior to the forwarding of the goods or failure to provide full particulars may cause unnecessary delay in handling of your returned merchandise.

ADDRESS:

Collins Radio Company
Sales Service Department
Cedar Rapids, Iowa

INFORMATION NEEDED:

(A) Type number, name, and serial number of equipment
(B) Date of delivery of equipment
(C) Date placed in service
(D) Number of hours of service
(E) Nature of trouble
(F) Cause of trouble if known
(G) Part number (9 or 10 digit number) and name of part thought to be causing trouble
(H) Item or symbol number of same obtained from parts list or schematic
(I) Collins' number (and name) of unit sub-assemblies involved in trouble
(J) Remarks

HOW TO ORDER REPLACEMENT PARTS. When ordering replacement parts, you should direct your order as indicated below and furnish the following information insofar as applicable. To enable us to give you better replacement service, please be sure to give us complete information.

ADDRESS:

Collins Radio Company
Sales Service Department
Cedar Rapids, Iowa

INFORMATION NEEDED:

(A) Quantity required
(B) Collins' part number (9 or 10 digit number) and description
(C) Item or symbol number obtained from parts list or schematic
(D) Collins' type number, name, and serial number of principal equipment
(E) Unit sub-assembly number (where applicable)

CUSTOMER PUBLICATIONS SERVICE

This Instruction Book contains all essential information for the installation, operation and maintenance of your Collins Radio Equipment.

Collins' Research and Development and Manufacturing Divisions have designed and built equipment of the highest possible quality for your use. Many pieces of information have been assembled by the Publications Engineering Department; this book has also been tested against a similar quality standard.

With these production goals achieved, it would be easy to regard all tasks as completed.

Collins Radio does not do so. Engineers, in the laboratories and the field, are continuing to explore every possible step that may add a detail of perfection to your equipment. Production experts are constantly seeking improved manufacturing methods.

You may also have ideas about new applications and improvements in your equipment. Collins Radio will be happy to hear them.

Our own advanced development and your suggestions may well result in new or additional information for this book.

Collins Radio wishes to pass such information to you as quickly as possible. This book has been published in loose-leaf form, so that it may be kept up to date by the addition of pages, or by substitution of revised pages.

To make certain that you receive all additional or revised pages for this Instruction Book, please tear out and return the post card. It is important that we know:

- ☆ **Your Name and Address**
- ☆ **The Type Number and Serial Number of your equipment**

CUSTOMER PUBLICATIONS SERVICE REGISTRATION CARD

Date .....

COLLINS

We have purchased the following unit(s) of Collins Radio Equipment:

Type Number .....

Date Purchased ..... Serial Number .....

We request that you register our ownership of this equipment, and provide Customer Publications Service.

Owner's Name .....

Address .....

BE SURE TO SUPPLY ALL EQUIPMENT SERIAL NUMBERS. THANK YOU.

Postage
Will Be Paid
by
Addressee

No
Postage Stamp
Necessary
If Mailed in the
United States

BUSINESS REPLY CARD

FIRST CLASS PERMIT No. 236 CEDAR RAPIDS, IOWA

COLLINS RADIO COMPANY
Cedar Rapids, Iowa

PUBLICATIONS ENGINEERING DEPT.

INSTRUCTION BOOK

VHF NAVIGATION AND COMMUNICATIONS RECEIVER 51X-2

520 5599 00
3rd EDITION, 1 MARCH 1959

©COLLINS RADIO COMPANY
1958, 1959

CEDAR RAPIDS, IOWA, U.S.A.

PRINTED IN THE UNITED STATES OF AMERICA

TABLE OF CONTENTS

Section		Page
I	GENERAL DESCRIPTION	1
1.1	Introduction	1
1.2	Equipment Description	1
1.2.1	51X-2 Mechanical Description	1
1.2.2	51X-2 Electrical Description	1
1.2.3	Frequency Control Units	1
1.2.4	Communications Antenna 37R-1	3
1.2.5	VOR Navigation Antenna 37J-3	3
1.2.6	137X-1 VHF Communication/Navigation Antenna	3
1.2.7	37R-2 VHF Communication Antenna	4
1.2.8	68U-1 Coaxial Relay	4
1.3	Equipment Available	5
1.4	Reference Data	7
II	INSTALLATION	9
2.1	Unpacking	9
2.2	Installation	9
2.2.1	Choosing Location	9
2.2.2	Shockmount Installation	9
2.2.3	Receiver Installation	9
2.2.4	Frequency Control Unit Installation	9
2.2.5	Antenna 37R-1 Installation	9
2.2.6	Antenna 37J-3 Installation	10
2.2.7	Interconnections and Cabling Requirements	10
2.2.8	Installation of Remote Squelch Control	10
2.3	Forced Air Cooling for Receiver 51X-2	10

Section		Page
2.3.1	Introduction	10
2.3.2	Cooling Provisions	10
2.3.3	Cooling Air Required	10
2.3.4	Operation of Two 51X-2 Receivers on the Same Antenna	17
2.3.5	Test Method	31
2.3.6	Pressure Drop	32
2.4	Adapter Kit 49T-2	32
2.4.1	Equipment Supplied	33
2.4.2	51X-2 Modification Procedure	33
2.4.3	Assembling 51X-2 Into Case	33
2.5	Preinstallation Checks and Initial Adjustments	34
2.5.1	Preinstallation Checks	34
2.5.2	Initial Adjustments	34
III	**OPERATION**	36
3.1	Performance and Function of Equipment	36
3.2	Operating Controls	36
3.2.1	Frequency Selection	36
3.2.2	Squelch Control	36
3.2.3	Audio Level	36
3.2.4	ATC Level	36
3.3	Operating Procedure	36
3.3.1	Preflight Checks	36
3.3.2	Emergency Checks and Repairs	37
IV	**PRINCIPLES OF OPERATION**	37
4.1	Electrical Description, Receiver Circuits	37
4.1.1	General	37
4.1.2	Frequency Selecting System	37
4.1.3	Radio-Frequency Amplifier, First Mixer and High-Frequency Oscillator	37
4.1.4	Variable I-F Amplifier, Second Mixer, and Low-Frequency Oscillator	40
4.1.5	500-Kc Intermediate Amplifier	41
4.1.6	Detector	42
4.1.7	Noise Limiter	42
4.1.8	Audio Amplifier Stage	42
4.1.9	Audio Output Stage	42
4.1.10	Automatic Gain Control System	42
4.1.11	Squelch Circuit	45
4.1.12	Filament Circuits	45
4.1.13	Type 516A-1 A-C Power Supply	45
4.1.14	Type 516B-3 D-C Power Supply	47
4.1.15	Power Supply Filtering	47
4.2	Frequency Selecting Circuits	47
4.2.1	Electrical Description, General	47
4.2.2	51X-2 Autopositioner System	49
V	**INSPECTION AND PREVENTIVE MAINTENANCE**	55
5.1	General	55
5.2	Operator's Performance Check	55
5.3	Performance Test of Receiver 51X-2	55
5.3.1	General	55
5.3.2	Test Equipment Required	55
5.3.3	Preliminary Tests	56
5.3.4	Test Requirements	56
5.4	Lubrication	58
5.4.1	Lubricants	58
5.4.2	Parts not Requiring Lubrication	58
5.4.3	Parts to be Lubricated	58
VI	**CORRECTIVE MAINTENANCE**	59
6.1	Mechanical Alignment	59
6.2	Electrical Alignment	59

Section		Page
6.2.1	R-F and Variable I-F Amplifier Alignment	59
6.2.2	Evaluation Tests of R-F and Variable I-F Amplifier Module	60
6.2.3	500-Kc Passive Filter Alignment	64
6.2.4	Evaluation Tests of 500-Kc Passive Filter	64
6.2.5	500-Kc Passive Filter Touch-up	65
6.2.6	I-F and Audio Module Alignment	65
6.2.7	Evaluation Test of I-F and Audio Module	65
6.3	Servicing Transistor Circuits	67
6.3.1	General	67
6.3.2	Test Equipment	67
6.3.3	Electric Soldering Irons	67
6.3.4	Servicing Practices	68
6.3.5	Trouble Shooting	68
6.4	Disassembly Procedures	70
6.4.1	Removal of Receiver from Shockmount and Exterior Case	70
6.4.2	Removal of Modules	70
6.4.3	Removal of Module Covers	70
6.4.4	Replacement of Crystals in Low-Frequency Oscillator	70
6.4.5	Replacement of Crystals in VHF Oscillator	70
6.4.6	Removal of Tuning Motor B1	71
6.4.7	Removal of Variable I-F Coil Assembly	71
6.4.8	Removal of VHF Oscillator Switch Assembly to Gain Access to Oscillator Tube Socket Components	71
6.4.9	Removal of R-F Subassembly from Variable I-F Module	71
6.4.10	Removal of Variable I-F Subassembly	71
6.4.11	Removal of Frequency Selector Switches	71
6.4.12	Disassembly of Frequency Selector	72
VII	**PARTS LIST**	72
VIII	**ILLUSTRATIONS**	93/94

LIST OF ILLUSTRATIONS

Figure		Page
1-1	VHF Navigation and Communications Receiver 51X-2 (C05-172-P)	vi
1-2	Shockmount 349H-4 (C05-131-P)	1
1-3	Control Unit 614U-1/2 (C05-175-P)	2
1-4	Control Unit 614U-3/4 (C05-176-P)	3
1-5	37R-1 VHF Communications Antenna (C120-53-P)	3
1-6	37J-3 VOR Navigation Antenna (C120-54-P)	3
1-7	137X-1 VHF Communication/Navigation Antenna (C120-71-P)	4
1-8	37R-2 VHF Communication Antenna (C429-08-P)	4
1-9	68U-1 Coaxial Relay (C120-55-P)	4
2-1	Receiver 51X-2, Outline and Mounting Dimensions (C05-108-5)	15
2-2	Shockmount 349H-4, Outline and Mounting Dimensions (C05-112-4)	16
2-3	Dual 51X-2 Installation with One Antenna, Block Diagram (C05-180-2)	17
2-4	Dual Shockmount 390E-1, Outline and Mounting Dimensions (C05-119-3)	17
2-5	Control Unit 614X-1, Outline and Mounting Dimensions (C25-11-1X)	18
2-6	Control Units 614U-7/8, Outline and Mounting Dimensions (C05-179-4)	19
2-7	Control Unit 314U-10, Outline and Mounting Dimensions (A13-850-4)	20
2-8	Control Unit 614G-1, Outline and Mounting Dimensions (C05-22-3)	21
2-9	Control Unit 614F-1, Outline and Mounting Dimensions (C05-23-3)	22
2-10	Control Unit 614U-1/2, Outline and Mounting Dimensions (C120-26-4)	23
2-11	Control Unit 614U-3/4, Outline and Mounting Dimensions (C05-140-4)	23
2-12	Antenna 37R-1, Outline and Mounting Dimensions (A43-808-4)	24

Figure		Page
2-13	Antenna 37J-3, Outline and Mounting Dimensions (C05-128-3)	25
2-14	137X-1 Antenna, Outline and Mounting Dimensions (C05-183-X)	26
2-15	37R-2 Antenna, Outline and Mounting Dimensions (C429-06-3)	27
2-16	37R-2 Antenna, Outline and Mounting Dimensions (Replacement of 37J-3) (C429-07-3)	28
2-17	68U-1 Coaxial Relay, Installation and Circuit Diagram (C120-14-3)	29
2-18	51X-2, External Wiring Diagram (C05-113-4)	30
2-19	Interconnection Diagram for Receiver 51X-2, Transmitter 17L-7 and Control Units 614X-1, and 614U-1/2 for DCD Operation (C120-31-3)	31
2-20	Thermocouple Welding Schematic (C05-132-P)	31
2-21	(Top) Welded Thermocouple and (Bottom) the Placement of a Thermocouple on a Typical Component (C05-134-P)	32
2-22	Relationship of Pressure Drop to Air Flow (C05-126-1X)	33
2-23	Adapter Kit 49T-2, Wiring Diagram (C05-129-3)	34
2-24	Adapter 49T-2, Outline and Mounting Dimensions (C05-177-5)	35
3-1	Navigation and Communications Receiver 51X-2, Front Panel (C05-135-P)	36
4-1	Navigation and Communications Receiver 51X-2, Block Diagram (C05-120-4)	38
4-2	Circuit Frequencies Employed in the Reception of a 2-Mc Portion of the Reception Spectrum, Block Diagram (C05-122-4)	39
4-3	Over-all Frequency Scheme, Block Diagram (C05-118-3)	40
4-4	R-F Gain Control, Simplified (C05-106-3)	41
4-5	Audio and Squelch Circuits, Simplified (C05-107-4)	43
4-6	AGC Circuits, Simplified (C05-104-4)	44
4-7	Filament Circuits, Simplified (C05-105-4)	46
4-8	Autopositioner Basic Elements (A29-405-3)	48
4-9	Autopositioner Function Diagram (A29-419-3)	48
4-10	Autopositioner Electrical Circuits, Simplified (C05-109-5)	51/52
4-11	2-Mc Seeking Switch Wire Table (C05-110-3)	53
4-12	50-Kc Seeking Switch Wire Table (C05-111-3)	54
6-1	Mechanical Alignment Procedure (C05-121-6)	61/62
6-2	Stage Gain Chart (C05-127-3)	63
6-3	Receiver 51X-2, Resistance and Voltage Measurements (C05-137-4)	69
6-4	Navigation and Communications Receiver 51X-2, Right Oblique View (C05-136-P)	70
7-1	Receiver 51X-2, Main Frame, Top (C05-143-P)	72
7-2	Receiver 51X-2, Main Frame, Bottom (C05-144-P)	73
7-3	R-F and Variable I-F Module, Top (C05-145-P)	73
7-4	R-F and Variable I-F Module, Bottom (C05-146-P)	73
7-5	R-F Module, Top View (C05-147-P)	74
7-6	R-F Module, Side View (C05-148-P)	74
7-7	R-F Module, Front Exploded (C05-149-P)	75
7-8	First Injection Oscillator Crystal and Coil Positions (C05-150-P)	75
7-9	Variable I-F Module, Top (C05-151-P)	76
7-10	Variable I-F Module, Bottom (C05-152-P)	76
7-11	Variable I-F Module, Front Exploded (C05-153-P)	77
7-12	Second Injection Oscillator, Crystal Positions (C05-154-P)	78
7-13	500-Kc Filter, Side (C05-155-P)	78
7-14	500-Kc Filter, Bottom (C05-156-P)	78
7-15	I-F and Audio Module, Top (C05-157-P)	78
7-16	I-F and Audio Module, Bottom (C05-158-P)	79
7-17	I-F and Audio Module, Side (C05-159-P)	79
7-18	Gear Box, Front (C05-160-P)	80
7-19	Gear Box, Top (C05-161-P)	80
7-20	Gear Box, Side (C05-162-P)	81
7-21	Gear Box, Bottom (C05-163-P)	81
7-22	Gear Box, Side (C05-164-P)	82
7-23	Gear Box Exploded, First Step (C05-165-P)	82
7-24	Gear Box Exploded, Second Step (C05-166-P)	83
7-25	Gear Box Exploded, Third Step (C05-167-P)	83
7-26	A-C Power Supply 516A-1 (C05-168-P)	84
7-27	D-C Power Supply 516B-3, Top (C05-169-P)	84
7-28	D-C Power Supply 516B-3, Side (C05-170-P)	84
7-29	D-C Power Supply 516B-3, Side Open (C05-171-P)	84
7-30	Control Unit 614U-1/2, Top Open (C05-173-P)	85

Figure		Page
7-31	Control Unit 614U-3/4, Top Open (C05-174-P)	85
8-1	Navigation and Communications Receiver 51X-2, Schematic Diagram (C05-123-6)	93/94
8-2	Control Unit 614U-1/2, Schematic Diagram (C05-138-5)	95
8-3	Control Unit 614U-3/4, Schematic Diagram (C05-141-5)	96
8-4	Control Unit 614G-1, Schematic Diagram (C05-139-4)	97
8-5	Control Unit 614F-1, Schematic Diagram (C120-61-2X)	99
8-6	Control Unit 614X-1, Schematic Diagram (C120-63-2X)	100
8-7	Preparation and Connection of RG-58/U or RG-141/U Coaxial Cable to Type DPA Contact (C05-178-4)	101
8-8	Control Units 614U-7/8, Schematic Diagram (C05-182-6)	103/104
8-9	Control Unit 314U-10, Schematic Diagram (C174-11-4)	105

LIST OF TABLES

Table		Page
1-1	Equipment Supplied	5
1-2	Accessory Equipment	5
1-3	Available Control Units	6
1-4	51X-2 Modules	6
1-5	Electron Tube and Transistor Complement	8
1-6	Diode Complement	8
2-1	List of Component Temperatures	10
2-2	System Interconnection of 51X-2 Receiver, 51V-3 Receiver, 344A-1 or 344B-1 Instrumentation Units and 614U-3 or 614U-4 Control Units	11
2-3	System Interconnection of 17L-7 Transmitter, 51X-2 Receiver, and 614U-1 or 614U-2 Control Units for SCS or DCS Operation	12
2-4	System Interconnection of 17L-7 Transmitter, 51X-2 Receiver, and 614X-1 or 614F-1 Control Units for SCS or DCS Operation	13
2-5	System Interconnection of 51X-2 Receiver, 51V-3 Receiver, 344A-1 or 344B-1 Instrumentation Units and 314U-10 Control Unit	14

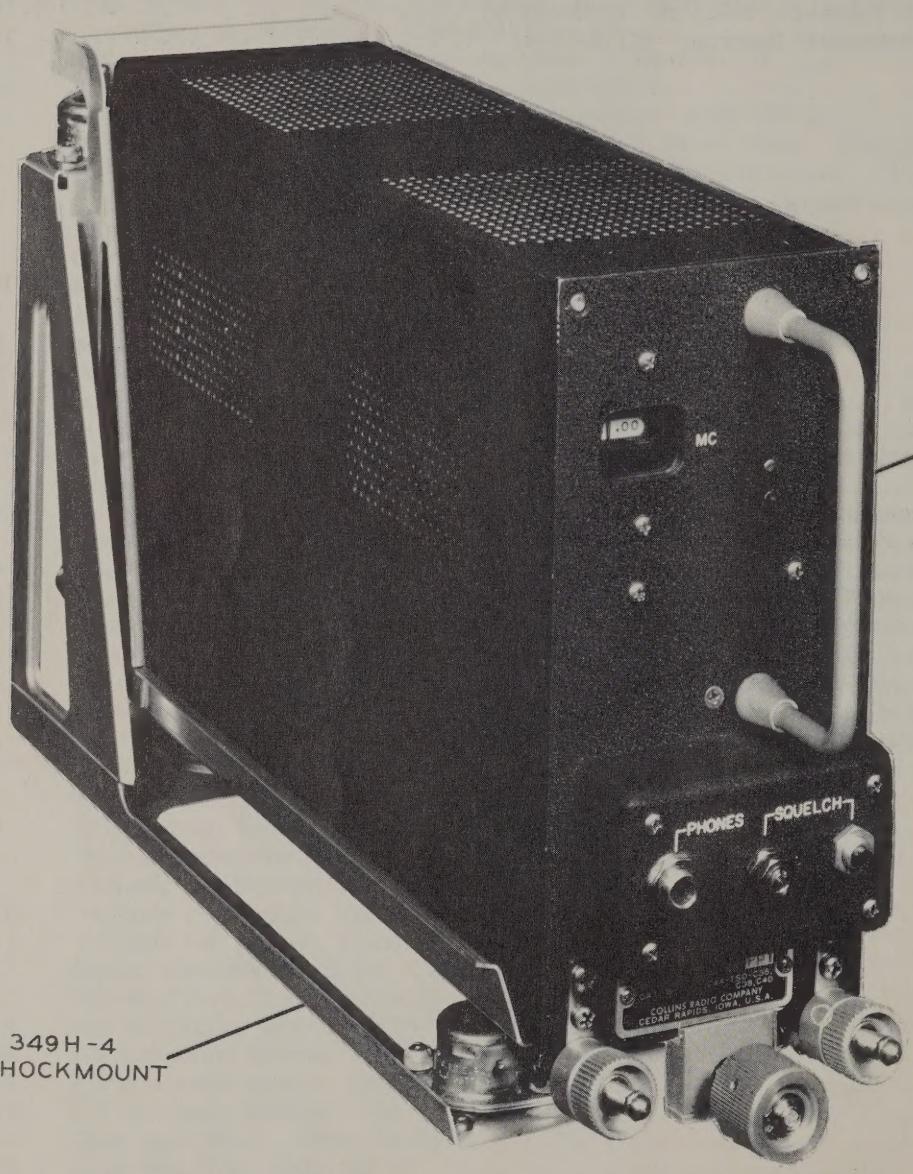

Figure 1-1. VHF Navigation and Communications Receiver 51X-2

SECTION I
GENERAL DESCRIPTION

1.1 INTRODUCTION.

This instruction book contains information pertaining to the installation, operation, and maintenance of the Collins VHF Navigation and Communications Receiver 51X-2 and associated accessories.

1.2 EQUIPMENT DESCRIPTION.

The VHF Navigation and Communications Receiver 51X-2 (see figure 1-1) is a crystal-controlled, double-conversion, superheterodyne receiver which operates in the frequency range from 108.0 to 151.95 megacycles. A maximum of 880 channels, spaced 50 kc apart, are available in this frequency range. The receiver is entirely remotely controlled.

When used alone, the equipment receives amplitude-modulated communication and ATC signals. When used in conjunction with the Collins Instrumentation Unit 344A-1 or 344B-1, the receiver will supply VOR and ILS reception and instrumentation.

1.2.1 51X-2 MECHANICAL DESCRIPTION.

The 51X-2 is housed in an unpressurized, ARINC standard 3/8 ATR short case which is 3-9/16 inches wide, 7-1/2 inches high, and 12-9/16 inches long. Outline and mounting dimensions are given in figures 2-1, 2-2, and 2-3. The equipment weighs 10.5 pounds. Equipment weight including Shockmount 349H-4 (see figure 1-2) is 12 pounds.

The receiver is constructed of four modules and a main frame. The main frame contains a three-fourth-inch duct to accommodate cables and plugs and the passive filter module. All modules except the passive filter are plug-in type. Connections to receiver circuitry are made through a rear connector, Cannon DPA A29C1-34P.

The 51X-2 may be cooled in accordance with ARINC Specification No. 404. Cooling air is drawn into the unit at the top, pulled through the modules, and exhausted into the shockmount plenum chamber. Baffles distribute the cooling air. Air flow within the modules is controlled to permit uniform component temperature rises. Forced air cooling is not required.

1.2.2 51X-2 ELECTRICAL DESCRIPTION.

Receiver circuitry is contained in four modules and the main frame. Module A1, the r-f and variable i-f amplifier, consists of the r-f circuitry, oscillators, and variable i-f circuitry necessary to convert the incoming signal to a 500-kc fixed i-f. The Autopositioner® and frequency selector mechanism also is contained in this module. Module A2, the i-f and audio module, contains three stages of i-f amplification and audio detector and amplifer circuits. Module A5 is a passive i-f filter.

Two power supplies are available for use with the 51X-2. Module A3 is a Collins D-C Power Supply 516B-3 for use with a 27.5-v d-c supply. Module A4 is an A-C Power Supply 516A-1 for use with a 115-v, 300-1000-cps supply. Both modules will produce the plate voltages required to operate the receiver. A source of 27.5-v d-c is required for operation of relays, channeling mechanisms, and output transistor.

The main frame, designated module A6, contains interconnecting wiring and a passive filter tuned to 500 kc.

1.2.3 FREQUENCY CONTROL UNITS.

Frequency control units are available for remote frequency selection. All units are designed for panel mounting. Outline and dimensions of the units are shown in figures 2-5 through 2-11. All units contain two groups of wafer switches. One switch group is controlled by the fine frequency knob, and the other is controlled by the coarse frequency knob. Dial

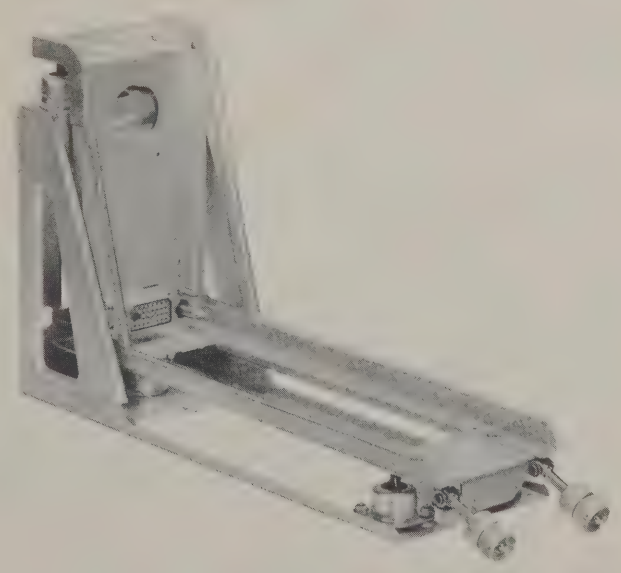

Figure 1-2. Shockmount 349H-4

markings of the knobs associated with each switch group are combined to indicate frequency directly in megacycles. The dials are illuminated by self-contained panel lamps. Wiring connections are made directly to the individual switches and lights of all control units, except the 614U units which have plug receptacles. Schematic diagrams of the control units are shown in figures 8-2 through 8-6 and figures 8-8 and 8-9.

1.2.3.1 POSSIBLE TRANSMITTER-RECEIVER COMBINATIONS. Several types of transmitter-receiver combined operations are possible, depending on the type of control unit used. These operations are described in ARINC Characteristic 520A, Airborne VHF Communications System. A brief definition of each type is given in the following subparagraphs.

a. SINGLE-CHANNEL SIMPLEX (SCS - separate operation of the receiver and transmitter on the same frequency with a common antenna). The receiver and transmitter may be tuned independently or from a common frequency control. Voice communication on any 50-kc spaced channel between 118.0 and 135.9 mc is possible.

b. DOUBLE-CHANNEL SIMPLEX (DCS - separate operation of the receiver and transmitter with a common antenna; the transmitter tuned six megacycles higher than the receiver). Double-channel transmit frequencies are specified by ARINC Characteristic 520A as from 124.00 to 126.95 mc, and from 133.0 to 135.9 mc, in 50-kc intervals. Transmitter tuning must be disabled for all other frequencies in double-channel operation. A common frequency control is used.

c. DOUBLE-CHANNEL DUPLEX (DCD - simultaneous operation of receiver and transmitter; the transmitter tuned six megacycles higher than the receiver). Double-channel transmit frequencies are given in the preceding paragraph. Transmitter tuning must be disabled for all other frequencies. Separate receiving and transmitting antennas must be used; the transmitter sidetone output and the receiver disabling circuits must be disconnected.

1.2.3.2 CONTROL UNIT 614G-1. See figure 2-8. Control Unit 614G-1 controls 51X-2 Receiver frequency selection, without a companion transmitter, or in SCS systems when independent tuning of the receiver and transmitter is desired. The control unit tunes the receiver in 50-kc steps to 360 frequencies within the range 118.0 mc to 135.9 mc. Two concentric knobs are used for frequency selection. Numerals, read downward as they appear in a vertical slot, represent hundreds, tens, units, tenths, and twentieths of megacycles. An accessory kit, Collins part number 596 1971 004, is available for conversion of the unit to edge-lighted panel mounting.

1.2.3.3 CONTROL UNIT 614F-1. See figure 2-9. The 614F-1 Control Unit controls frequency selection of both a 51X-2 Receiver and a companion 17L-( ) Transmitter in an SCS system. The unit is physically similar to Control Unit 614G-1, with additional switch wafers required to control the transmitter. Frequency selection is accomplished in the same manner. An accessory kit, Collins part number 596 1971 004, is available for converting the unit to edge-lighted panel mount.

1.2.3.4 CONTROL UNIT 614X-1. See figure 2-5. The 614X-1 Control Unit controls frequency selection of both a 51X-2 Receiver and a companion 17L-( ) Transmitter in SCS or DCD systems. An external relay, Collins part number 974 0207 00, is required for DCD operation. The relay opens receiver muting and disabling circuits and causes the transmitter double-channel relay to be energized for DCD operation.

The relay is not required for DCS operation. For DCS operation, the control unit is connected according to ARINC Characteristic 520A.

A toggle switch at the top of Control Unit 614X-1 is used to change from SCS to DCD operation, if the external relay is employed.

NOTE

If the external relay is not used, the toggle switch is employed to switch from SCS to DCS operation by moving it to the position marked DCD on the control unit.

Control Unit 614X-1 provides 50-kc spacing of channels within the range 118.00 to 135.95 mc for SCS operation. For DCD or DCS operation, the transmitter frequency is automatically set 6 mc higher than the receiver frequency, in the ranges 124.00 to 126.95 mc and 133.00 to 135.95 mc. The unit includes a blanking switch that prevents double-channel operation on all other frequencies. An accessory kit, 540 7372 004, is available for converting the unit to edge-lighted panel mount.

1.2.3.5 CONTROL UNITS 614U-1 AND 614U-2. See figure 1-3. Control Units 614U-1 and 614U-2 control

Figure 1-3. Control Unit 614U-1/2

frequency selection of both a 51X-2 Receiver and a 17L-7 Transmitter in SCS or DCD systems. They provide 50-kc tuning increments from 118.00 mc to 151.95 mc, which includes the extended range. An external relay, Collins part number 974 0207 00, is required for DCD operation. The relay opens the receiver disabling circuits and disconnects the transmitter sidetone from the receiver output. The relay is not required for DCS operation. For DCS operation, the control unit is connected according to ARINC Characteristic 520A. Figure 2-19 shows the connections for DCD operation with the external relay included. Figure 2-19 also describes connections for DCD operation with modifications for DCS.

A toggle switch at the top of the unit is used to change from SCS to DCD operation if the external relay is employed. The toggle switch is also employed to switch from SCS to DCS operation by moving it to the position marked DCD on the control unit.

Control Units 614U-1 and 614U-2 provide 50-kc spacing of channels within the range 118.00 to 135.95 mc for SCS operation. For DCD or DCS operation, the receiver tunes 118.00 to 120.95 and 127.00 to 129.95 mc, and the transmitter frequency is automatically set 6 mc higher than the receiver frequency in the ranges 124.00 to 126.95 mc and 133.00 to 135.95 mc. The unit includes a blanking switch that prevents double-channel operation on all other frequencies.

The units have an ON-OFF switch with which the associated equipment can be turned on and off.

The 614U-1 and 614U-2 are identical electrically and physically except that the 614U-1 is black and the 614U-2 is gray.

1.2.3.6 CONTROL UNITS 614U-3 AND 614U-4. See figure 1-4. Control Units 614U-3 and 614U-4 control the frequency selection of a 51X-2 Receiver and a 51V-3 Glide Slope Receiver. Both the communications channel and the glide slope channel are selected when the frequency selecting dial is set up.

The units have an ON-OFF switch with which the associated equipment can be turned off and on.

Figure 1-4. Control Unit 614U-3/4

The units afford frequency control of the 51X-2 through the range 108.00-151.95 mc in 50-kc steps.

The 614U-3 and the 614U-4 are identical except that the 614U-3 is black and the 614U-4 is gray.

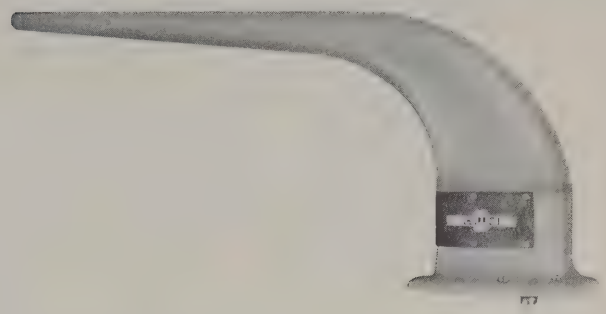

Figure 1-5. 37R-1 VHF Communications Antenna

1.2.4 COMMUNICATIONS ANTENNA 37R-1. See figure 1-5. The 37R-1 is a quarter-wave antenna designed to receive or transmit vertically polarized signals. It has a standing-wave ratio of less than 2 to 1 in the frequency range from 118.0 to 136.0 mc. The antenna is connected to the 51X-2 Receiver by a 52-ohm coaxial cable terminated in a UG-21/U connector. Because the receiver uses the smaller type 52-ohm cable, a BNC-to-N adapter is necessary for reducing the antenna connector to the receiver cable.

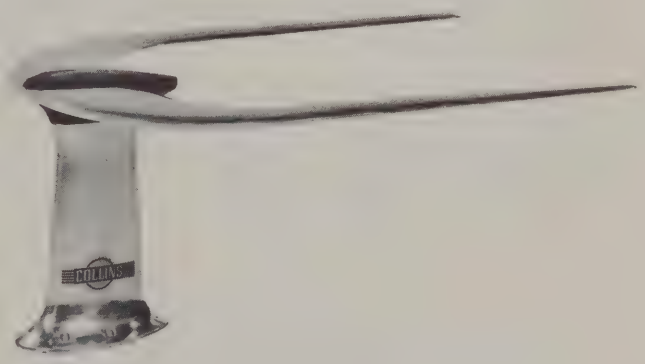

Figure 1-6. 37J-3 VOR Navigation Antenna

1.2.5 VOR NAVIGATION ANTENNA 37J-3. See figure 1-6. The 37J-3 is a horizontally polarized navigation antenna for receiving VOR and localizer signals. Frequency range is 108.0 to 122.0 mc with a standing-wave ratio of 5 to 1 or less. Impedance is 52 ohms into unbalanced line. The antenna is constructed of cast aluminum and formed and welded sheet aluminum. The 37J-3 is used with the 51X-2 when the 51X-2 is used in a VOR-101 navigation system.

1.2.6 137X-1 VHF COMMUNICATION/NAVIGATION ANTENNA. Refer to figure 1-7. The 137X-1 VHF Communication/Navigation Antenna provides essentially the same electrical characteristics as the 37J-3

Figure 1-7. 137X-1 VHF Communication/ Navigation Antenna

and 37R-1 antennas. Thus the 137X-1 can be used as a common antenna for both a communication and navigation system.

The standing-wave ratio at the communication terminal is less than 2:1 from 118 to 136 mc and at the navigation terminal is less than 5:1 from 108 to 127 mc.

The antenna will withstand forces encountered at Mach .9 at sea level in an attitude of 5 degrees pitch and 5 degrees yaw. The 137X-1 drag is approximately 2.7 pounds at 250 mph with 0 degree pitch and yaw and 15.3 pounds at 600 mph.

The 137X-1 is plastic filled with a Fiberglas covering. It weighs 4.7 pounds. The 137X-1 is CAA certified and passes military specifications.

Figure 1-8. 37R-2 VHF Communication Antenna

The 68U-1 Coaxial Relay must be used with the 137X-1 antenna to transfer the navigation/communication receiver from the navigation connector of the antenna to the communication portion of the antenna.

1.2.7 37R-2 VHF COMMUNICATION ANTENNA. Refer to figure 1-8. The 37R-2 is a vertically polarized communication antenna. The 37R-2 has a standing-wave ratio of 2:1 or less over the frequency range 118 to 156 mc. The nominal input impedance is 52 ohms. The 37R-2 is plastic-foam filled with a Fiberglas covering. The antenna weighs 2 pounds.

The 37R-2 has a drag of 0.5 pound at 250 mph and a drag of 1.3 pounds at 400 mph at 0 degree angle of attack.

1.2.8 68U-1 COAXIAL RELAY. Refer to figure 1-9. When a 51X-2 Receiver is used for both navigation and communication, it is necessary to switch the receiver between an omnirange antenna and the communication antenna. The 68U-1 relay performs this antenna switching. The relay is a self-contained unit designed for separate mounting. It is actuated by switching circuits in the 51X-2 Receiver. When the receiver is tuned to a frequency below 118.00 mc, the relay switches the receiver to the navigation antenna. For all frequencies above 118.00 mc, the receiver is connected through the 68U-1 relay and to the VHF Communications Antenna.

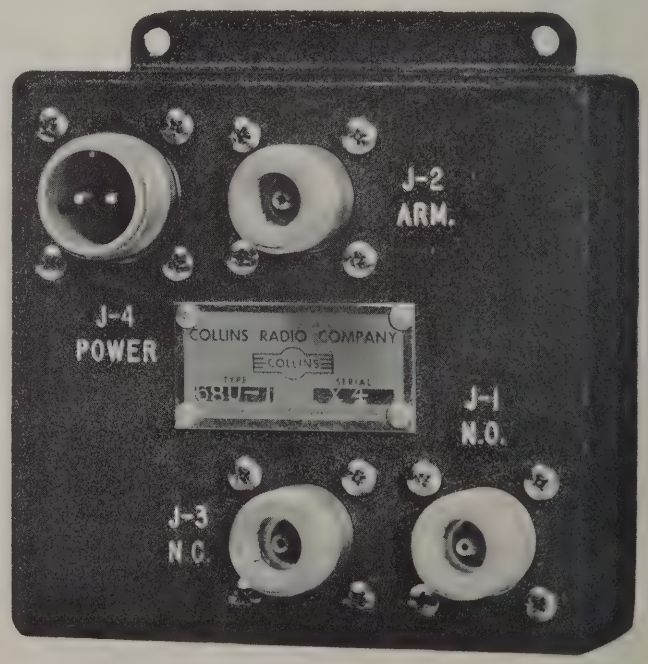

Figure 1-9. 68U-1 Coaxial Relay

1.3 EQUIPMENT AVAILABLE.

By grounding pin 20 on the receiver rear connector, the 51X-2 can be operated with any remote control unit designed according to ARINC Characteristic 520A over the part of the frequency range covered by the control unit. Table 1-3 lists several of these control units and their frequency ranges.

TABLE 1-1. EQUIPMENT SUPPLIED

TYPE NUMBER	DESCRIPTION	PART NUMBER
51X-2	VHF Navigation and Communications Receiver. Extended frequency coverage, less power supply module.	522 0833 004
51X-2	VHF Navigation and Communications Receiver. 108.0-135.95 mc, less power supply.	522 0833 014
51X-2	VHF Navigation and Communications Receiver. 108.0-135.95 mc, with a-c power supply.	522 0833 034
51X-2	VHF Navigation and Communications Receiver. 108.0-135.95 mc, with d-c power supply.	522 0833 054

TABLE 1-2. ACCESSORY EQUIPMENT

TYPE NUMBER	DESCRIPTION	WEIGHT (lb)	PART NUMBER
349H-4	3/8 ATR Shockmount	1.5	522 0736 005
----	Control Unit. See table 1-3.	---	----
390E-1	Dual Shockmount 51X-2 and 344B-1	2.8	522 0932 005
390E-2	Dual Shockmount 51X-2 and 17L-7	2.8	522 0933 005
37R-1	Communications Antenna	3.5	504 0543 004
37R-2	Communications Antenna	2.0	522 1135 012
37J-2 or 3	Omnirange Antenna	5.75	505 6800 004
137X-1	Communication/Navigation Antenna	4.7	522 1136 011
49T-2	51X-2 to 51X-1 Adapter Kit	2.5	522 1007 004
68U-1	Coaxial Relay		504 4271 003

TABLE 1-3. AVAILABLE CONTROL UNITS

TYPE	DESCRIPTION	PART NUMBER
614G-1	Controls 51X-2 over the 118.0-135.95 mc range.	522 9063 005
614F-1	Controls 51X-2/17L-7 over the 118.0-135.95 mc range.	522 9018 005
614X-1	Same function as 614F-1, plus an SCS/DCD switch.	522 0271 005
614U-1	Controls 51X-2/17L-7 over 118.0-151.95 mc range in 50-kc steps, DCD, ON-OFF and audio/squelch, black.	522 1221 003
614U-2	Same as 614U-1 except gray.	522 1222 003
614U-3	Controls 51X-2/51V-3, over 108.0-151.95 mc range in 50-kc steps, ON-OFF switch and audio/squelch, black.	522 1223 003
614U-4	Same as 614U-3 except gray.	522 1224 003
614U-7/8	Controls 51X-2 and 51V-3 (108 to 151.95 mc with 50 kc spacing) and DMET	522 1473 003
314U-10	Controls 51X-2/51V-3 over frequency range of 108.0 through 135.9 mc.	522 9028 005

NOTE: The volume and squelch kits presently available with these controls are not suitable for use with the 51X-2.

TABLE 1-4. 51X-2 MODULES

TYPE NUMBER	DESCRIPTION		DIMENSIONS (inches)	WEIGHT (pounds)	COLLINS PART NUMBER
	MODULE	FUNCTION			
51X-2	A1	R-F and Variable I-F Amplifier	12 x 3-1/2 x 3-1/2	4.8	542 4718 005
	A2	I-F and Audio	7-1/2 x 3 x 2-1/4	2.9	542 4748 006
516B-3 or	A3	D-C Power Supply, 27.5-v d-c input	2 x 3-1/4 x 3	0.81	522 1091 004
516A-1 Mod. 1	A4	A-C Power Supply, 115-v 300-1000 cps input	2 x 3-1/4 x 3	0.75	522 0440 004
---	A5	500-Kc Filter	--	---	542 4777 004

1.4 REFERENCE DATA.

Size	ARINC standard short 3/8 ATR Case, 3-9/16 x 7-1/2 x 12-9/16 inches.
Weight	10.5 pounds without shockmount.
Mounting	On Shockmount 349H-4 with similar units on an ARINC, shock-mounted, equipment shelf or on Dual Shockmount 390E-1 or 390E-2.
Number of units	A main frame and four modules.
Ambient temperature range	Normal operating range +10°C to +55°C with slightly reduced performance to -40°C. Thirty minutes operation at +70°C.
Humidity	95-100% for 48 hours.
Altitude	Normal operation up to 30,000 feet.
Power requirements	With 516B-3 27.5 v d-c, -20% +10%; 1.2 amperes normal, 3.3 amperes channeling peak. With 516A-1 115 v 300-1000 cps, 25 watts; 27.5 v d-c, -20% +10%, 0.1 ampere normal, 2.2 amperes channeling peak.
Frequency range	108.0 to 151.95 mc, 50-kc channel spacing.
Number of channels	880 maximum.
Channel selection	Two Autopositioners and an ARINC 520A remote control unit.
Frequency stability	±0.0035% under the following conditions taken singly: a. D-c input varied from 24 to 29 volts. b. A-c input varied from 105 to 125 volts. c. Temperature varied from +10°C to +70°C. d. Humidity varied from 10% to 95% at +50°C. e. Altitude varied from sea level to 30,000 feet.
Selectivity	40 kc minimum at 6 db down; 77 kc maximum at 60 db down.
Sensitivity	NMT 3 uv input for 6 db signal-plus-noise to noise ratio.
Spurious response	NLT 80 db down (incl images).
Squelch	Carrier operated noise silencer with squelch threshold control.
Noise limiter	Series peak noise limiter.
Agc characteristic	4 db variation maximum from 5 uv to 100,000 uv. 4 db variation maximum from 100,000 uv to 400,000 uv.
Agc time constant	0.5 second from 108.0 to 117.95 mc. 0.1 second from 118.0 to 151.95 mc.
Input impedance	52 ohms unbalanced; swr less than 4 to 1.
Output impedances	Audio - 500 ohms balanced. ATC/VOR/LOC - 1000 ohms unbalanced, variable, at least 0.5 v output with 1000 uv input, 30% modulation into 100K load.
Output power	Capable of 100 mw with 3 uv input, 30% modulation.

Fidelity	Audio-NMT 6 db variation from 300 to 3750 cps, down at least 20 db at 120 cps and 5750 cps. ATC/VOR/LOC NMT - 6 db variation from 30 cps to 22 kc.
Harmonic distortion	7.5% maximum at 30% modulation, 100 mw output. 20% maximum at 90% modulation, 100 mw output.
Receiver disabling	The receiver will be disabled when 27.5 v d-c is applied to pin 23 of the rear connector.
Tubes and transistors	5654 - 6 5670 - 3 DT4-17 - 1 DT4-18 - 3 (d-c supply only) 2N398 or 2N414 - 1 (d-c supply only) Total 14

TABLE 1-5. ELECTRON TUBE AND TRANSISTOR COMPLEMENT

LOCATION	FUNCTION	SYMBOL	TYPE
Module A1	R-F Amplifier	V1	5654
	First Mixer	V2	5654
	Variable I-F Amplifier	V3	5654
	Second Mixer/Oscillator	V4	5670
	First Injection Oscillator	V5	5670
Module A2	First I-F Amplifier	V1	5654
	Second I-F Amplifier	V2	5654
	Third I-F Amplifier	V3	5654
	A-F Amp/Squelch	V4	5670
	Audio Output	Q1	DT4-17
Module A3	Power Supply Oscillator	Q1	DT4-18
	Power Supply Oscillator	Q2	DT4-18
	Power Supply Blanker	Q3	DT4-18
	Power Supply Blanker	Q4	2N414 or 2N398

TABLE 1-6. DIODE COMPLEMENT

LOCATION	FUNCTION	SYMBOL	TYPE
Module A2	AGC Rectifier	CR1	HD2182
	AGC Rectifier	CR2	601C
	Detector	CR3	601C
	Noise Limiter	CR4	601C
	AGC Gate	CR5	601C
	Bias Gate	CR6	601C
	Voltage Reference	CR7	ZA-35
Module A3	Rectifier	CR1	1N1695 or 1N539
	Rectifier	CR2	1N539
	Voltage Reference	CR3	651C0
Module A4	Rectifier	CR1	1N1695 or 1N540

SECTION II
INSTALLATION

2.1 UNPACKING.

Remove all packing material, and carefully lift out unit. Inspect for damage. Be sure all controls on control units work properly. All claims for damage in shipment must be filed promptly with the transportation company. If claims for damage are to be filed, the original packing cases and material should be preserved.

2.2 INSTALLATION.

2.2.1 CHOOSING LOCATION.

The receiver may be mounted in any convenient location. The radio compartment is the most suitable location from the standpoint of accessibility and cable lengths. Since, in most cases, the receiver is cooled by convection, the preferred location is in a well-ventilated position near the bottom of the radio rack where the ambient temperature does not exceed 55°C. Adequate clearance for the mounting of the receiver on its shockmount must be provided. Antenna 37J-3 should be mounted in the location that gives best localizer and omnirange reception for minimum propeller modulation effects. Experiments have determined that the location atop the vertical rudder is best for most airplanes. These experiments did not go into the results of severe icing conditions or static discharge effects. The second best location is on top of the fuselage over the cabin or passenger compartment, but tail shadow causes nearly 19-db signal strength attenuation. Whatever its location, it must be shielded from radar and radio altimeter antennas by the aircraft structure. Also, it must be mounted so that its dipoles are in a horizontal plane when the aircraft is in normal flying attitude.

2.2.2 SHOCKMOUNT INSTALLATION.

Receiver 51X-2 is contained in a single short 3/8 ATR case which may be mounted on a single shockmount (figures 2-1 and 2-2) or with a companion 17L-7 Transmitter on a dual mount (figure 2-4.) Similarly a dual shockmount is available in which to mount a 51X-2 and a companion type 344B-1 Instrumentation Unit. The shockmount used should be secured to the radio shelf by means of no. 8-32 screws, lock washers, and nuts. When using the dual shockmounts, connect the ground straps under each shockmount foot making sure that a good ground contact exists. Note that the shockmount connector is held in place by screws at the rear of the mount so that cabling may be connected to proper terminals with the connector removed from the shockmount.

2.2.3 RECEIVER INSTALLATION.

To install Receiver 51X-2 on the shockmount, proceed as follows:

a. Check to see that the positioning pin is in the correct position for the 51X-2.
b. Loosen the locking mechanisms by rotating the thumbscrews as far as possible in a counterclockwise direction.
c. Place the receiver on the shockmount, and push toward the rear making sure that the plug on the receiver is inserted properly into the shockmount receptacle.
d. Rotate the extractor thumbscrews clockwise until the rear connectors are fully engaged and the extractor clutch slips.
e. Engage, tighten, and safety wire the hold-down clamps.

NOTE

When removing the receiver from its shock mount by using the extractor mechanism, be sure that the hold-down clamps are disengaged before rotating the extractor screw.

2.2.4 FREQUENCY CONTROL UNIT INSTALLATION.

a. GENERAL. Several types of frequency control units (types 614G-1, 614F-1, 614X-1, 614U-1, 614U-2, 614U-3, and 614U-4) may be used with Receiver 51X-2; all are of limited facilities except the 614U-1/2. (For details concerning the selection and use of each unit, see section I, table 1-3.) Except for the depth behind the panel, mounting details for all the units except the 614U-1/2 and 614U-3/4 are identical. Figures 2-5 through 2-11 are installation drawings for the control units.
b. MOUNTING DETAIL. Control Units 614G-1, 614F-1, and 614X-1 may be mounted in either of two ways. The unit may be mounted from the rear of the radio control panel using the front panel supplied, or as an alternate, the controls may be mounted as an integral part of the radio control panel in the aircraft. If the second method is used, the front panel supplied with the control unit should be discarded. Dimensions for layouts are given in figures 2-5 through 2-9. Mounting dimensions for the 614U-1/2 and 614U-3/4 Control Units are shown in figures 2-10 and 2-11.

2.2.5 ANTENNA 37R-1 INSTALLATION.

Figure 2-12 contains outline and mounting dimensions for Antenna 37R-1. Mounting base strength should be

increased by mounting a 12-gauge rectangular aluminum plate inside the aircraft and under the antenna base. Apply a paste gasket material, such as Permatex or Parkers Unipar, to the base of the antenna mast before fastening to the aircraft. Secure the antenna to the aircraft with no. 10-32 Fillister head screws. Anchor nuts that can be riveted to the aluminum plate are recommended.

2.2.6 ANTENNA 37J-3 INSTALLATION.

When mounting Antenna 37J-3, a rubber gasket should be used between the bottom of the antenna and the skin of the aircraft to act as a seal. Also, the mounting base strength should be increased by mounting a 12-gauge rectangular aluminum plate inside the aircraft and under the antenna base. A base plate is provided for mounting on pressurized aircraft. Drill holes according to the drawing of figure 2-13. Apply a paste gasket material, such as Permatex or Parkers Unipar, to the base of antenna mast before fastening to the aircraft. Secure the antenna to the aircraft with no. 10-32 flathead screws. Anchor nuts that can be riveted to the aluminum plate are recommended.

2.2.7 INTERCONNECTIONS AND CABLING REQUIREMENTS.

Complete interconnection information is included in figure 2-1. An external wiring diagram is given in figure 2-18. Where practical, use the wire sizes given in the table. Terminals not used on the shockmount are not shown in the table. Unused terminals should not be used as tie points. A 52-ohm coaxial line of RG-141/U (preferred) or RG-58/U is used as the antenna leadin. The line connects to terminal A-1 of the shockmount and in a BNC connector at the antenna. A BNC-to-N adapter will be necessary to connect the BNC plug to the antenna. This leadin should be as short as possible and should be run close to the aircraft structure at all points.

Use RG-8/U or similar coax for improved performance on long runs. Use a UG-23D/U to UG-536A/U adapter for a floating connection between the RG-8/U and the RG-58/U connected to the receiver shockmount. For a bulkhead connection, use a UG-22B/U connector for the RG-8/U and a UG-536A/U connector for the RG-58/U.

Additional wiring information is given in tables 2-2, 2-3, 2-4, 2-5, and figure 2-19. Refer to figure 8-7 for coaxial cable attachment instructions.

2.2.8 INSTALLATION OF REMOTE SQUELCH CONTROL.

A remote squelch control which is accessible to the pilot or radio operator can be added as an accessory to the receiver. This control, a 10,000-ohm F taper (ccw log) potentiometer, is wired from pin 25 of plug 1A6P1 (receiver plug) to ground. See figure 2-18.

Any range of adjustment of the remote squelch between maximum and minimum squelch threshold can be obtained by varying the setting of the front panel SQUELCH control, R1. (Maximum squelch threshold corresponds to minimum receiver sensitivity; minimum squelch threshold to maximum receiver sensitivity.) If a maximum squelch threshold adjustment is desired to provide the widest range of remote adjustment, set SQUELCH (figure 3-1) to its maximum counterclockwise limit.

2.3 FORCED AIR COOLING FOR RECEIVER 51X-2.

2.3.1 INTRODUCTION.

The reliability of airborne electronic equipment is determined to an important extent by the operating temperature of components and tube envelopes. The increased amount of electronic equipment required by modern aircraft has resulted in increased radio rack temperatures, which increased component temperature, causing reduced equipment reliability.

2.3.2 COOLING PROVISIONS.

This receiver is supplied with a dust cover and internal configurations (including Collins Tube Shields 66J) which are suitable for any of the following installation conditions:

a. On a radio rack with forced cooling provisions per ARINC Specification No. 404.
b. On an individual shockmount without forced cooling.
c. On a shelf-type radio rack without forced cooling.

This section describes a method of determining when the proper amount of cooling air is supplied to the receiver.

2.3.3 COOLING AIR REQUIRED.

When cooled as specified in ARINC Specification No. 404 (at the rate of 30 pounds per hour per 100 watts at 8000-foot altitude and 80°F inlet air temperature), the unit requires 7.5 pounds of cooling air per hour.

To prevent excessive depositing of contamination particles in the unit, we recommend that 23 pounds of cooling air per hour not be exceeded. To insure long-term operation of the equipment, it is recommended that the cooling air be free of impurities, such as dust, dirt, cigarette tars, etc., which would contaminate the equipment.

TABLE 2-1
LIST OF COMPONENT TEMPERATURES

MODULE	COMPONENT	TEMPERATURE IN °C
A2	C6	55
A2	C15	55
A4	C1	54
A6	C2	40

TABLE 2-2. SYSTEM
INSTE

WIRE FUNCTION	ARINC NOTATI
4-Amp Circuit Breaker	
On-Off Control	
51X-2 - 344A/B Power	
2-Amp Circuit Breaker	
51V-3 Power	
1-Amp Fuse	
344B-1 Instrument Power	
Ground	
Ground	
Ground	
Receiver Audio In	
Receiver Audio Out	
Audio Ground	
Remote Squelch Control	
Navigation Audio	
Nav/Com Ant Transfer	
GS and LOC ON-STBY Relay	
GS Antenna	
VOR - Antenna	
GS Deviation	+dn
GS Deviation	+up
GS Flag	+
GS Flag	-
Unit Mc Control	A
Unit Mc Control	B
Unit Mc Control	C
Unit Mc Control	D
Fractional Mc Control	E
Fractional Mc Control	F
Fractional Mc Control	G
Fractional Mc Control	H
Odd Mc Control	J
Odd Fract. Mc Control	K
Even Fract. Mc Control	L
Even Mc Control	M
Extended Frequency Coverage	N
Channel 1	1
Channel 2	2
Channel 3	3
Channel 4	4
Channel 5	5
Channel 6	6
Channel 7	7
Channel 8	8
Channel 9	9
Channel 10	10
A-B Relay Open on A	A-B
Dial Light 27.5 V Max	
Dial Light Ground	

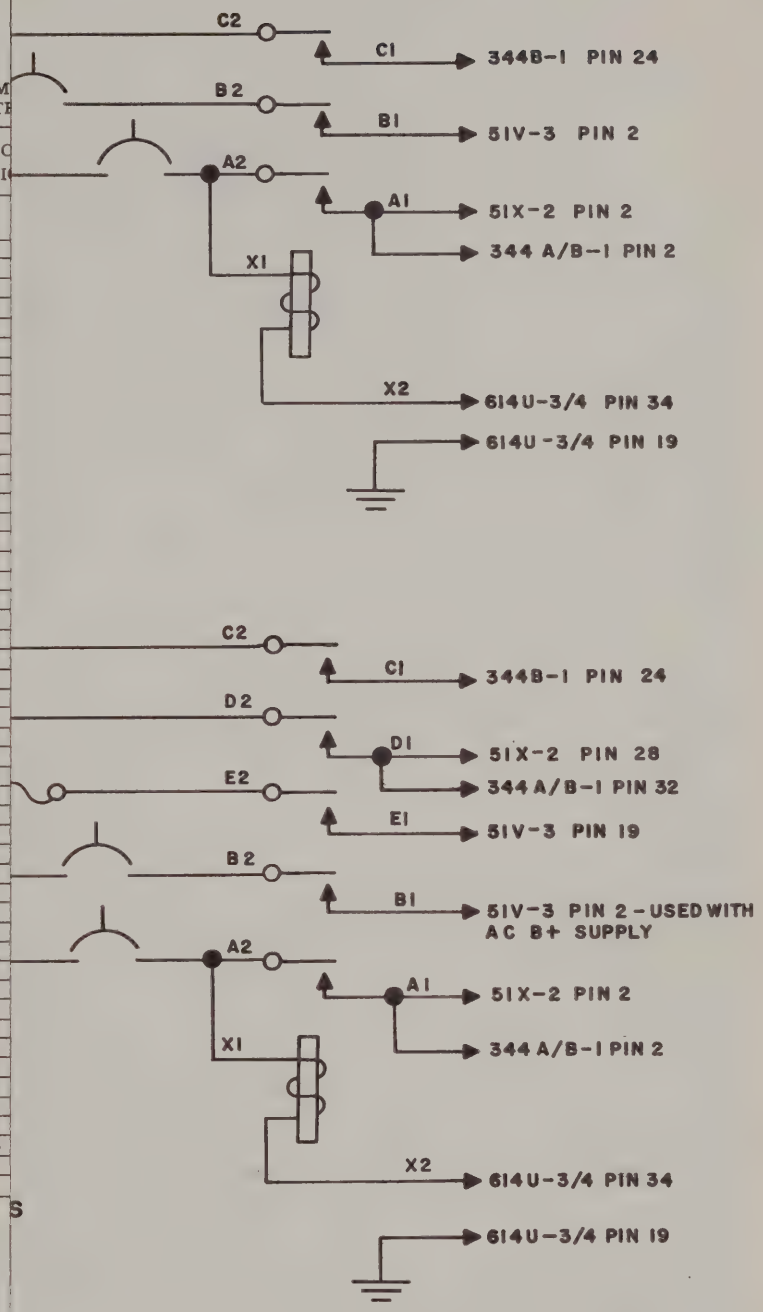

increased by mounting a 12-gauge rectangular aluminum plate inside the aircraft and under the antenna base. Apply a paste gasket material, such as Permatex or Parkers Unipar, to the base of the antenna mast before fastening to the aircraft. Secure the antenna to the aircraft with no. 10-32 Fillister head screws. Anchor nuts that can be riveted to the aluminum plate are recommended.

2.2.6 ANTENNA 37J-3 INSTALLATION.

When mounting Antenna 37J-3, a rubber gasket should be used between the bottom of the antenna and the skin of the aircraft to act as a seal. Also, the mounting base strength should be increased by mounting a 12-gauge rectangular aluminum plate inside the aircraft and under the antenna base. A base plate is provided for mounting on pressurized aircraft. Drill holes according to the drawing of figure 2-13. Apply a paste gasket material, such as Permatex or Parkers Unipar, to the base of antenna mast before fastening to the aircraft. Secure the antenna to the aircraft with no. 10-32 flathead screws. Anchor nuts that can be riveted to the aluminum plate are recommended.

2.2.7 INTERCONNECTIONS AND CABLING REQUIREMENTS.

Complete interconnection information is included in figure 2-1. An external wiring diagram is given in figure 2-18. Where practical, use the wire sizes given in the table. Terminals not used on the shockmount are not shown in the table. Unused terminals should not be used as tie points. A 52-ohm coaxial line of RG-141/U (preferred) or RG-58/U is used as the antenna leadin. The line connects to terminal A-1 of the shockmount and in a BNC connector at the antenna. A BNC-to-N adapter will be necessary to connect the BNC plug to the antenna. This leadin should be as short as possible and should be run close to the aircraft structure at all points.

Use RG-8/U or similar coax for improved performance on long runs. Use a UG-23D/U to UG-536A/U adapter for a floating connection between the RG-8/U and the RG-58/U connected to the receiver shockmount. For a bulkhead connection, use a UG-22B/U connector for the RG-8/U and a UG-536A/U connector for the RG-58/U.

Additional wiring information is given in tables 2-2, 2-3, 2-4, 2-5, and figure 2-19. Refer to figure 8-7 for coaxial cable attachment instructions.

2.2.8 INSTALLATION OF REMOTE SQUELCH CONTROL.

A remote squelch control which is accessible to the pilot or radio operator can be added as an accessory to the receiver. This control, a 10,000-ohm F taper (ccw log) potentiometer, is wired from pin 25 of plug 1A6P1 (receiver plug) to ground. See figure 2-18. Any range of adjustment of the remote squelch between maximum and minimum squelch threshold can be obtained by varying the setting of the front panel SQUELCH control, R1. (Maximum squelch threshold corresponds to minimum receiver sensitivity; minimum squelch threshold to maximum receiver sensitivity.) If a maximum squelch threshold adjustment is desired to provide the widest range of remote adjustment, set SQUELCH (figure 3-1) to its maximum counterclockwise limit.

2.3 FORCED AIR COOLING FOR RECEIVER 51X-2.

2.3.1 INTRODUCTION.

The reliability of airborne electronic equipment is determined to an important extent by the operating temperature of components and tube envelopes. The increased amount of electronic equipment required by modern aircraft has resulted in increased radio rack temperatures, which increased component temperature, causing reduced equipment reliability.

2.3.2 COOLING PROVISIONS.

This receiver is supplied with a dust cover and internal configurations (including Collins Tube Shields 66J) which are suitable for any of the following installation conditions:

a. On a radio rack with forced cooling provisions per ARINC Specification No. 404.
b. On an individual shockmount without forced cooling.
c. On a shelf-type radio rack without forced cooling.

This section describes a method of determining when the proper amount of cooling air is supplied to the receiver.

2.3.3 COOLING AIR REQUIRED.

When cooled as specified in ARINC Specification No. 404 (at the rate of 30 pounds per hour per 100 watts at 8000-foot altitude and 80°F inlet air temperature), the unit requires 7.5 pounds of cooling air per hour.

To prevent excessive depositing of contamination particles in the unit, we recommend that 23 pounds of cooling air per hour not be exceeded. To insure long-term operation of the equipment, it is recommended that the cooling air be free of impurities, such as dust, dirt, cigarette tars, etc., which would contaminate the equipment.

TABLE 2-1
LIST OF COMPONENT TEMPERATURES

MODULE	COMPONENT	TEMPERATURE IN °C
A2	C6	55
A2	C15	55
A4	C1	54
A6	C2	40

TABLE 2-2. SYSTEM INTERCONNECTION OF 51X-2 RECEIVER, 51V-3 RECEIVER, 344A-1 OR 344B-1 INSTRUMENTATION UNITS AND 614U-3 OR 614U-4 CONTROL UNITS

WIRE FUNCTION	ARINC NOTATION	51X-2	51V-3	614U-3/4	POWER RELAY	344B-1	344A-1	WIRING NOTES
4-Amp Circuit Breaker					X1			From 27.5 V D-C Bus
					A2			
On-Off Control				34	X2			
51X-2 - 344A/B Power		2			A1	2	2	
2-Amp Circuit Breaker					B2			From 27.5 V D-C Bus
51V-3 Power			2		B1			
1-Amp Fuse					C2			From 115 V 380-420-Cps Line
344B-1 Instrument Power					C1	24		
Ground		22	1	18		25	25	To Rack Ground
Ground				19				
Ground				31				
Receiver Audio In		4		15				
Receiver Audio Out				16				To Interphone System
Audio Ground		5		17				Audio Ground
Remote Squelch Control		25		14				10 K CCW Log to Gnd Min R = Max Sens
Navigation Audio		18				29	29	
Nav/Com Ant Transfer		19				30		27.5 V D-C 118.0 Mc and higher
GS and LOC ON-STBY Relay		27	18			27	27	27.5 V D-C on Glide Slope Freq
GS Antenna			A2					
VOR - Antenna		A-1						
GS Deviation	+dn		3					To Instruments
GS Deviation	+up		4					
GS Flag	+		15					
GS Flag	-		16					
Unit Mc Control	A	6		1				
Unit Mc Control	B	7		2				
Unit Mc Control	C	8		3				
Unit Mc Control	D	9		4				
Fractional Mc Control	E	10		5				
Fractional Mc Control	F	11		6				
Fractional Mc Control	G	12		7				
Fractional Mc Control	H	13		8				
Odd Mc Control	J	14		9				
Odd Fract. Mc Control	K	15		10				
Even Fract. Mc Control	L	16		11				
Even Mc Control	M	17		12				
Extended Frequency Coverage	N	20		13				
Channel 1	1		5	20				
Channel 2	2		6	21				
Channel 3	3		7	22				
Channel 4	4		8	23				
Channel 5	5		9	24				
Channel 6	6		10	25				
Channel 7	7		11	26				
Channel 8	8		12	27				
Channel 9	9		13	28				
Channel 10	10		14	29				
A-B Relay Open on A	A-B		17	30				
Dial Light 27.5 V Max				36				To Dimmer Circuit
Dial Light Ground				37				Panel Ground

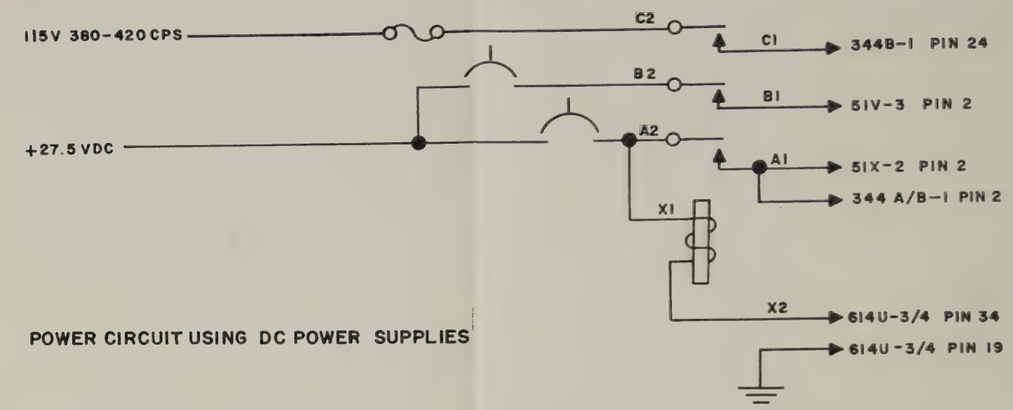

POWER CIRCUIT USING DC POWER SUPPLIES

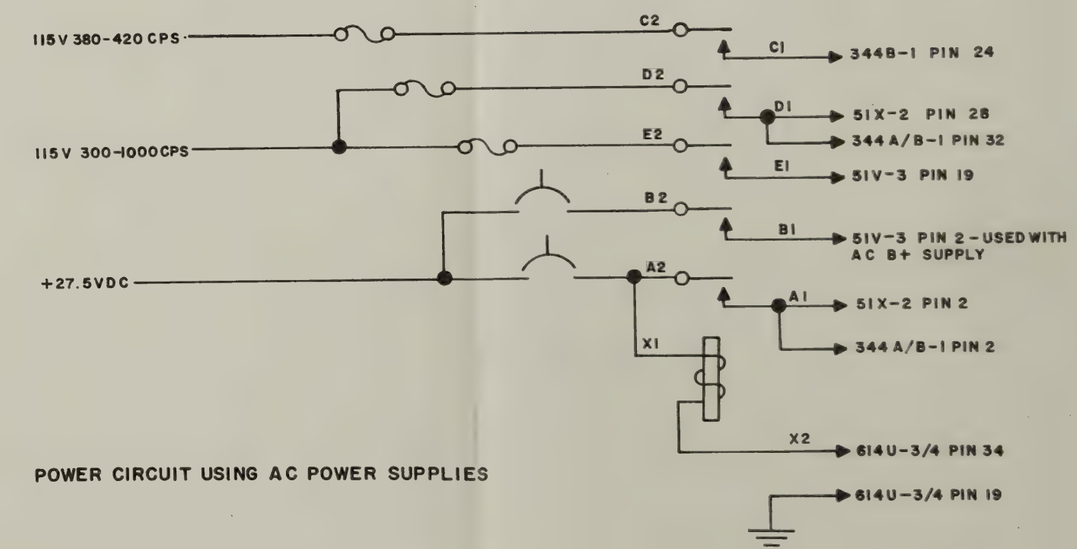

POWER CIRCUIT USING AC POWER SUPPLIES

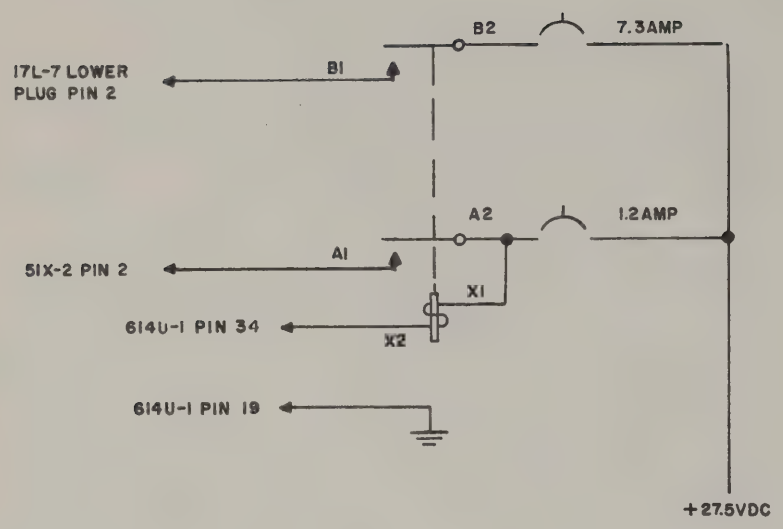

POWER CIRCUIT 27.5DC ONLY

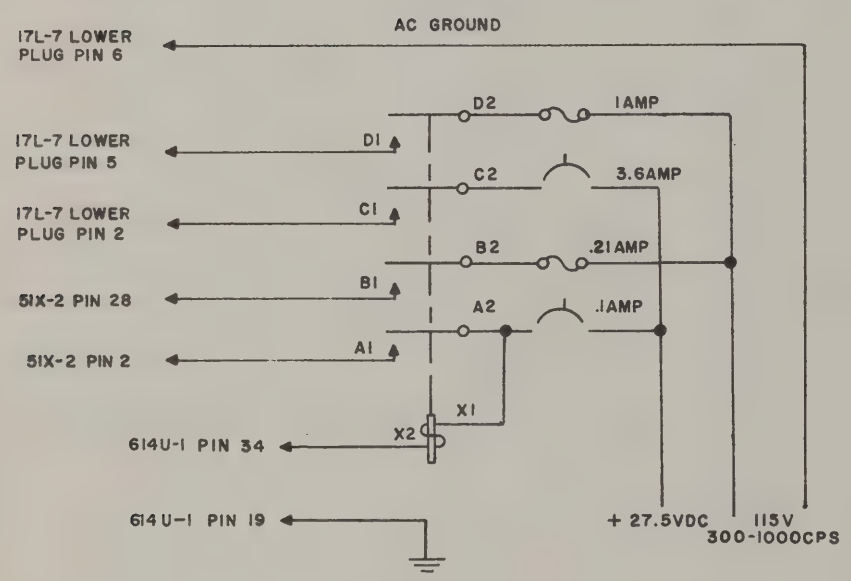

POWER CIRCUIT 115V 300–1000CPS

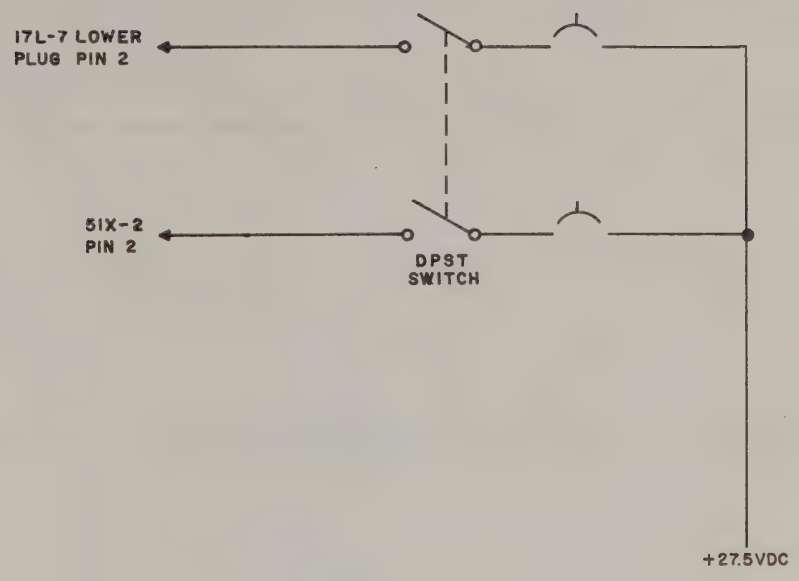

POWER CIRCUIT FOR 27VDC

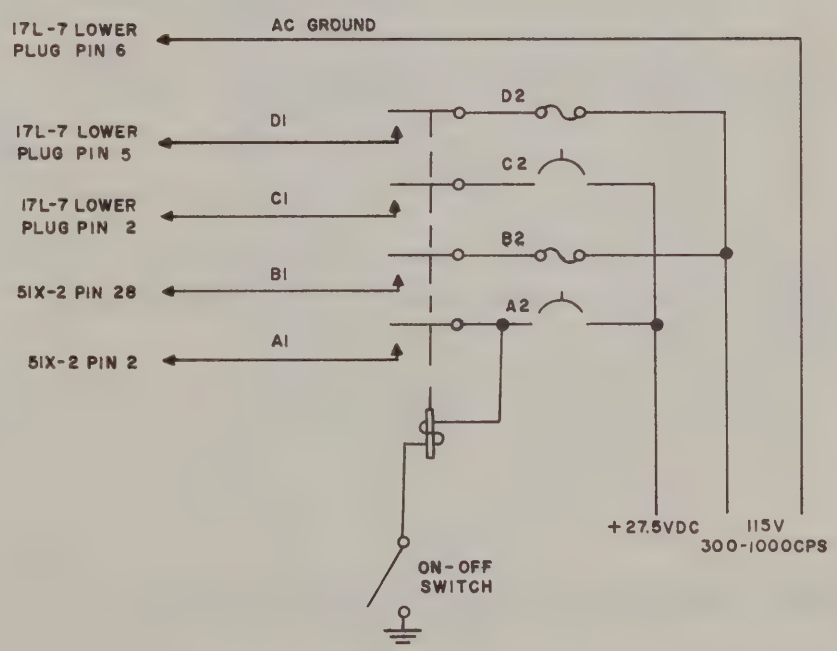

POWER CIRCUIT 115V 300-1000CPS

TABLE 2-3. SYSTEM INTERCONNECTION OF 17L-7 TRANSMITTER, 51X-2 RECEIVER, AND 614U-1 OR 614U-2 CONTROL UNITS FOR SCS OR DCS OPERATION*

WIRE FUNCTION	ARINC CODE	17L-7 UPPER PLUG	17L-7 LOWER PLUG	51X-2	614U-1/2	POWER RELAY (Note 1)	WIRING NOTES
Two-Ampere Circuit Breaker						X1	From 27.5 V D-C Bus
						A2	See Notes 1 and 2
On-Off Control Wire					34	X2	
Ground		1	1	22	19		Radio Rack Ground
Ground		2			35		Interconnected
Ground					18		
Receiver 27.5 V D-C				2		A1	
10-Ampere Circuit Breaker						B2	From 27.5 V D-C Bus
Transmitter 27.5 V D-C Filament			2			B1	
Transmitter 27.5 V D-C Control		19					Interconnected
Transmitter 27.5 V D-C Main		3					
Transmitter 27.5 V D-C Main		4					
6-Mc Frequency Shift DCS		21			33		6-Mc Shift When Grounded
Receiver Disable		20		23			+27.5 V During Transmit
Receiver Audio				4	15		
Ground - Audio and Side Tone			19	5	17		Radio Rack Ground
Receiver Audio			13		16		
Receiver Audio and Side Tone			14				To Interphone System
Audio Muting Relay Normally Open			15				
Transmitter Side Tone			18				Interconnected
Remote Squelch Control				25	14		10 K CCW Log to Grd Min R = Max Sens
Dial Light - 27.5 V D-C Max					36		To Dimmer Circuit
Dial Light Ground					37		Panel Ground
Antenna			A1				To Communications Antenna
Antenna - Receiver to Transmitter			A2	A1			52-Ohm Coaxial
Microphone Audio (Ring)			20				To Microphone System Note 4
Microphone Key (Tip)		16					To Microphone System
Unit Mc Control	A		7		20		
Unit Mc Control	B		8		21		
Unit Mc Control	C		9		22		
Unit Mc Control	D		10		23		
Fractional Mc Control	E		3		24		
Fractional Mc Control	F		4		25		
Fractional Mc Control	G		5		26		
Fractional Mc Control	H		6		27		
Odd Mc Control	J		11		28		
Odd Fractional Mc Control	K		12		29		
Even Fractional Mc Control	L		22		30		
Even Mc Control	M	17			31		
Extended Frequency Coverage	N	7			32		
Unit Mc Control	A			6	1		
Unit Mc Control	B			7	2		
Unit Mc Control	C			8	3		
Unit Mc Control	D			9	4		
Fractional Mc Control	E			10	5		
Fractional Mc Control	F			11	6		
Fractional Mc Control	G			12	7		
Fractional Mc Control	H			13	8		
Odd Mc Control	J			14	9		
Odd Fractional Mc Control	K			15	10		
Even Fractional Mc Control	L			16	11		
Even Mc Control	M			17	12		
Extended Frequency Coverage	N			20	13		

*FOR ADDITIONAL INFORMATION NECESSARY FOR DCD OPERATION SEE INTERCONNECTION DIAGRAM

Note 1 Power relay furnished by customer.
Note 2 Wiring shown for d-c operation.
Note 3 For a-c operation, connect 27.5 v d-c to same terminals as used for d-c operation.
Note 4 Microphone audio lead should be twisted pair with ground lead or shielded or otherwise isolated from electrical noise sources.

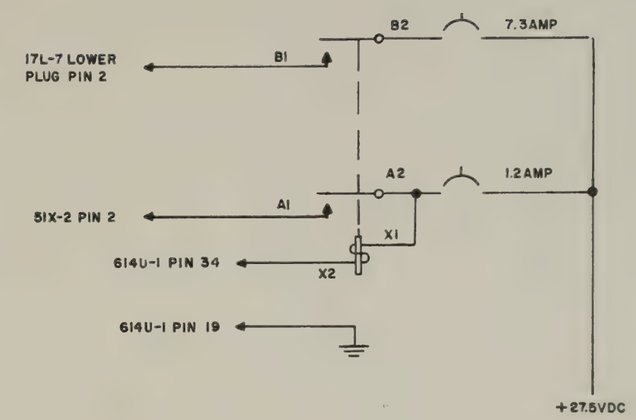

POWER CIRCUIT 27.5DC ONLY

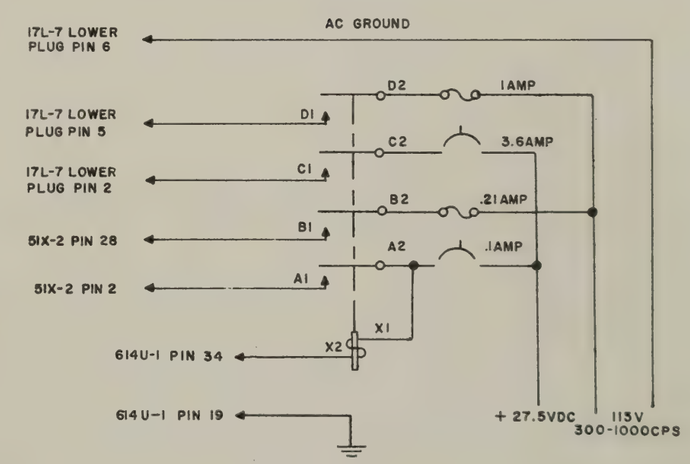

POWER CIRCUIT 115V 300-1000CPS

TABLE 2-4. SYSTEM INTERCONNECTION OF 17L-7 TRANSMITTER, 51X-2 RECEIVER, AND 614X-1 OR 614F-1 CONTROL UNITS FOR SCS OR DCS OPERATION*

WIRE FUNCTION	ARINC CODE	17L-7 UPPER PLUG	17L-7 LOWER PLUG	51X-2	614X-1	614F-1	WIRING NOTES
Ground		1-2	1	22			Power Ground
27.5 V D-C to Receiver				2			To Power System
27.5 V D-C to Transmitter Fil and Control		19	2				To Power System
27.5 V D-C to Transmitter Main		3-4					Interconnected Notes 1 and 2
6-Mc Frequency Shift DCS		21			DCD		Ground for DCS Operation
Receiver Disable		20		23			+27.5 V during Transmit
Receiver Audio			13	4			
Ground Audio and Side Tone			19	5			
Receiver Audio and Side Tone			14				
Audio Muting Relay Normally Open			15				Interconnected
Transmitter Side Tone			18				
Remote Squelch Control				25			10 K CCW Log to Gnd Min R = Max Sens
Antenna			A1				To Comm Antenna
Antenna Receiver to Transmitter			A2	A1			52-Ohm Coaxial
Microphone Audio (Ring)			20				To Microphone Selector Note 3
Microphone Audio (Key)		18					To Microphone Selector
Unit Mc Control	A		7		A	A	
Unit Mc Control	B		8		B	B	
Unit Mc Control	C		9		C	C	
Unit Mc Control	D		10		D	D	
Fractional Mc Control	E		3		E	E	
Fractional Mc Control	F		4		F	F	
Fractional Mc Control	G		5		G	G	
Fractional Mc Control	H		6		H	H	
Odd Mc Control	J		11		J	J	
Odd Fractional Mc Control	K		12		K	K	
Even Fractional Mc Control	L		22		L	L	
Even Mc Control	M	17			M	M	
Extended Frequency Coverage	N	7					Do Not Grd for 108-136 Mc Operation
Unit Mc Control	A			6	A	A	
Unit Mc Control	B			7	B	B	
Unit Mc Control	C			8	C	C	
Unit Mc Control	D			9	D	D	
Fractional Mc Control	E			10	E	E	
Fractional Mc Control	F			11	F	F	
Fractional Mc Control	G			12	G	G	
Fractional Mc Control	H			13	H	H	
Odd Mc Control	J			14	J	J	
Odd Fractional Mc Control	K			15	K	K	
Even Fractional Mc Control	L			16	L	L	
Even Mc Control	M			17	M	M	
Extended Frequency Coverage	N			20			Grd for 108 to 136 Mc Operation
Ground					I	I	

*FOR ADDITIONAL INFORMATION NECESSARY FOR DCD OPERATION SEE INTERCONNECTION DIAGRAM

Note 1 Wiring shown for d-c operation.
Note 2 For a-c operation, connect 27.5 v d-c to same terminals as used for d-c operation.
Note 3 Microphone audio lead should be twisted pair with ground lead or shielded or otherwise isolated from electrical noise sources.

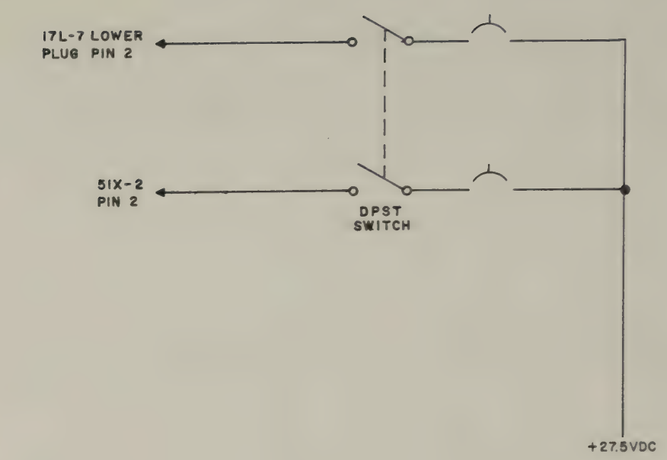

POWER CIRCUIT FOR 27VDC

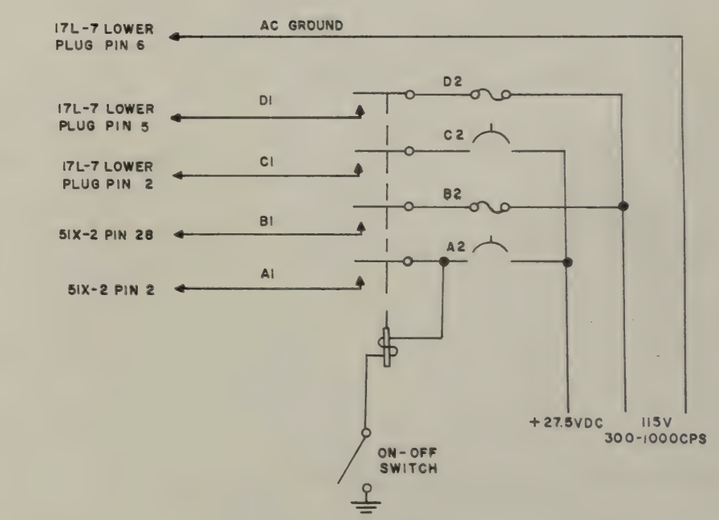

POWER CIRCUIT 115V 300-1000CPS

51V-3 RECEIVER, 344A-1 OR 344B-1
10 CONTROL UNITS

344B-1	344A-1	WIRING NOTES
		From 27.5 V D-C Bus
2	2	
		From 27.5 V D-C Bus
		From 115 V 380-420-Cps Line
24		
25	25	To Rack Ground
		To Volume Control
		Audio Ground
		10 K CCW Log to Gnd Min R = Max Sens
29	29	
30		27.5 V D-C 118.0 Mc and higher
27	27	27.5 V D-C on Glide Slope Freq
		To Instruments
		Ground at Rack
		Ground at Rack
		To Dimmer Circuit
		Panel Ground

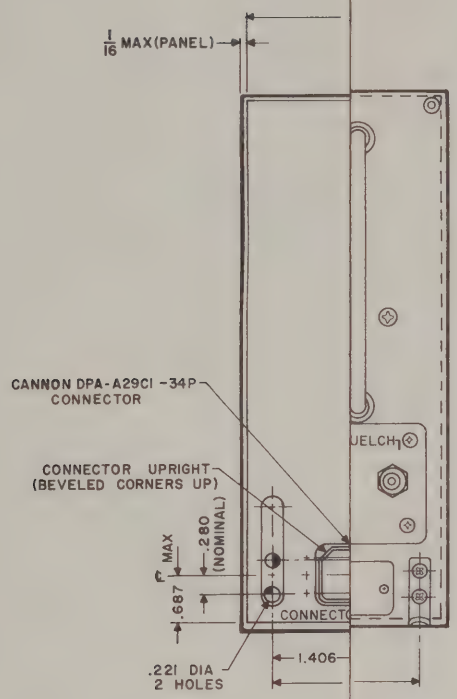

EXTERNAL CONNECTIONS ON DPA-A29CI-34P CONNECTOR

INPUT NO	FUNCTION	RECOMMENDED WIRE CODE
1	SPARE	
2	+27.5 V INPUT	
3	SPARE	
4	AUDIO OUTPUT 500 OHM + PHASE	
5	AUDIO OUTPUT 500 OHM -PHASE	
6	WIRE "A" UNIT MC CONTROL	
7	WIRE "B" UNIT MC CONTROL	
8	WIRE "C" UNIT MC CONTROL	
9	WIRE "D" UNIT MC CONTROL	
10	WIRE "E" FRACT MC CONTROL	
11	WIRE "F" FRACT MC CONTROL	
12	WIRE "G" FRACT MC CONTROL	
13	WIRE "H" FRACT MC CONTROL	
14	WIRE "J" ODD MC CONTROL	
15	WIRE "K" FRACT MC CONTROL	
16	WIRE "L" FRACT MC CONTROL	
17	WIRE "M" EVEN MC CONTROL	
18	ATCSS OUTPUT	
19	NAV-COMM ANTENNA TRANSFER RELAY	
20	WIRE "N" EXTENDED FREQ COVERAGE	
21	SPARE	
22	GROUND	
23	+27.5 V RCVR DISABLING	
24	SPARE	
25	REMOTE SQUELCH CONTROL	
26	SPARE	
27	+27.5 V G.S. RCVR ON OR STANDBY RELAY	
28	115 V AC 300-1000 CPS	
A1	COAX ANTENNA INPUT	

Figure 2-1. Receiver 51X-2, Outline and Mounting Dimensions

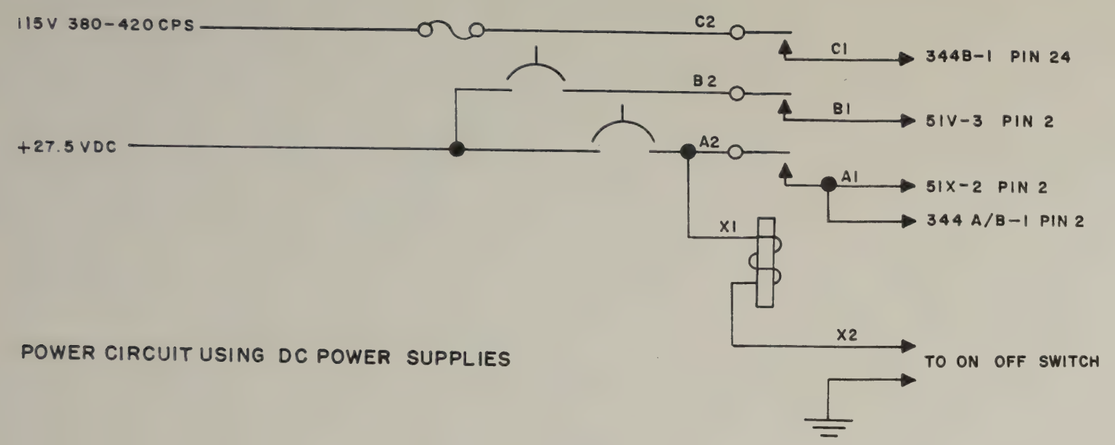

POWER CIRCUIT USING DC POWER SUPPLIES

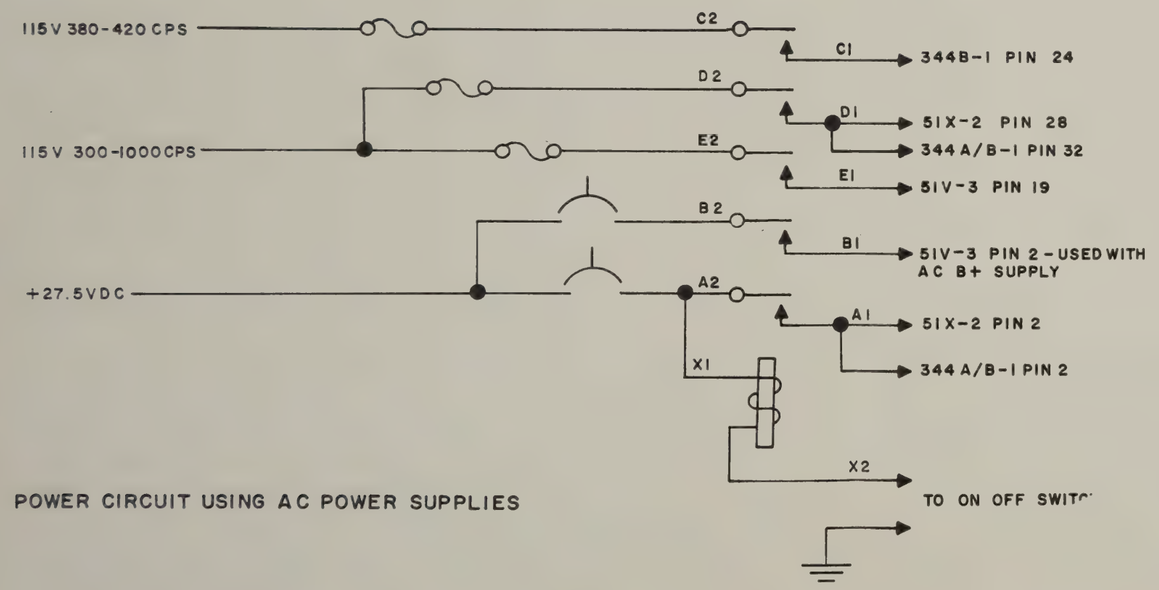

POWER CIRCUIT USING AC POWER SUPPLIES

TABLE 2-5. SYSTEM INTERCONNECTION OF 51X-2 RECEIVER, 51V-3 RECEIVER, 344A-1 OR 344B-1 INSTRUMENTATION UNITS AND 314U- 10 CONTROL UNITS

WIRE FUNCTION	ARINC NOTATION	51X-2	51V-3	314U- 10	POWER RELAY	344B-1	344A-1	WIRING NOTES
4-Amp Circuit Breaker					X1			From 27.5 V D-C Bus
					A2			
On-Off Control					X2			
51X-2 - 344A/B Power		2			A1	2	2	
2-Amp Circuit Breaker					B2			From 27.5 V D-C Bus
51V-3 Power			2		B1			
1-Amp Fuse					C2			From 115 V 380-420-Cps Line
344B-1 Instrument Power					C1	24		
Ground		22	1			25	25	To Rack Ground
Receiver Audio		4						To Volume Control
Audio Ground		5						Audio Ground
Remote Squelch Control		25						10 K CCW Log to Gnd Min R = Max Sens
Navigation Audio		18				29	29	
Nav/Com Ant Transfer		19				30		27.5 V D-C 118.0 Mc and higher
GS and LOC ON-STBY Relay		27	18			27	27	27.5 V D-C on Glide Slope Freq
GS Antenna			A2					
VOR - Antenna		A-1						
GS Deviation	+dn		3					To Instruments
GS Deviation	+up		4					
GS Flag	+		15					
GS Flag	-		16					
Unit Mc Control	A	6		A				
Unit Mc Control	B	7		B				
Unit Mc Control	C	8		C				
Unit Mc Control	D	9		D				
Fractional Mc Control	E	10		E				
Fractional Mc Control	F	11		F				
Fractional Mc Control	G	12		G				
Fractional Mc Control	H	13		H				
Odd Mc Control	J	14		J				
Odd Fract. Mc Control	K	15						
Even Fract. Mc Control	L	16						Ground at Rack
Even Mc Control	M	17		M				
Extended Frequency Coverage	N	20						Ground at Rack
Channel 1	1		5	Ch 1				
Channel 2	2		6	Ch 2				
Channel 3	3		7	Ch 3				
Channel 4	4		8	Ch 4				
Channel 5	5		9	Ch 5				
Channel 6	6		10	Ch 6				
Channel 7	7		11	Ch 7				
Channel 8	8		12	Ch 8				
Channel 9	9		13	Ch 9				
Channel 10	10		14	Ch 10				
A-B Relay Open on A	A-B		17	A-B				
Dial Light 27.5 V Max								To Dimmer Circuit
Dial Light Ground								Panel Ground

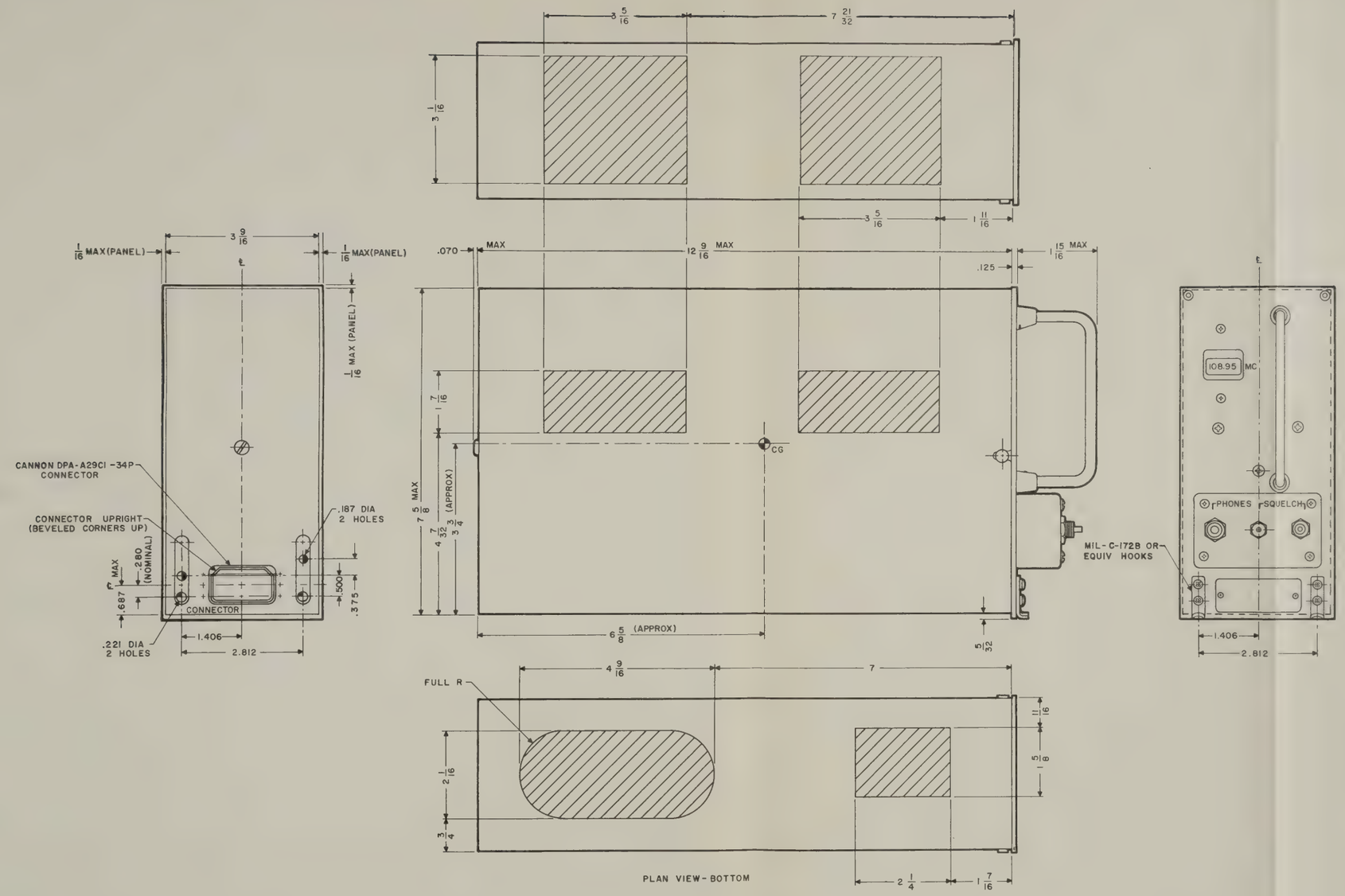

NOTES:

1. WEIGHT: 10.5 LBS (APPROX)
2. ALL DIMENSIONS GIVEN PER AIRLINES ELECTRONIC ENGINEERING COMMITTEE'S SPEC NO. 404 DATED MAY 1, 1956.
3. THE ABOVE $\frac{3}{8}$ SHORT ATR CASE IS TO BE MOUNTED ON A SHOCKMOUNT ATR RACK WITH BUILT-IN DPA29CI-33S TYPE CONNECTOR AND TWO SPRING-LOADED REAR HOLD-DOWN PINS.
4. CONNECTOR ORIENTATION AND INDEXING PIN ARRANGEMENT IS IN ACCORDANCE WITH INDEX CODE 3, DATA SHEET IIC.
5. POWER REQUIREMENTS: AC & DC OPERATION - 115 VAC 300-1000 CPS 25W.
   27.5 VDC .1 AMP CONT., 2.2 AMP INTERMITTENT.
   DC OPERATION ONLY- 27.5 VDC 1.2 AMP CONT., 3.3 AMP INTERMITTENT.
6. $\frac{1}{8}$ DIA VENTILATION HOLES FALL WITHIN THE SHADED AREAS SHOWN ON THE TOP, SIDE, & BOTTOM VIEWS.
7. USE OF A CONTROL HEAD IN ACCORD WITH ARINC 520A, SECTION 5.6 IS PERMISSABLE IF PIN 20 OF 51X-2 REAR CONNECTOR IS GROUNDED. FREQUENCY COVERAGE IS THEN LIMITED BY THE CONTROL HEAD USED.

EXTERNAL CONNECTIONS ON DPA-A29CI-34P CONNECTOR

INPUT NO	FUNCTION	RECOMMENDED WIRE CODE
1	SPARE	
2	+27.5 V INPUT	
3	SPARE	
4	AUDIO OUTPUT 500 OHM + PHASE	
5	AUDIO OUTPUT 500 OHM -PHASE	
6	WIRE "A" UNIT MC CONTROL	
7	WIRE "B" UNIT MC CONTROL	
8	WIRE "C" UNIT MC CONTROL	
9	WIRE "D" UNIT MC CONTROL	
10	WIRE "E" FRACT MC CONTROL	
11	WIRE "F" FRACT MC CONTROL	
12	WIRE "G" FRACT MC CONTROL	
13	WIRE "H" FRACT MC CONTROL	
14	WIRE "J" ODD MC CONTROL	
15	WIRE "K" FRACT MC CONTROL	
16	WIRE "L" FRACT MC CONTROL	
17	WIRE "M" EVEN MC CONTROL	
18	ATCSS OUTPUT	
19	NAV-COMM ANTENNA TRANSFER RELAY	
20	WIRE "N" EXTENDED FREQ COVERAGE	
21	SPARE	
22	GROUND	
23	+27.5 V RCVR DISABLING	
24	SPARE	
25	REMOTE SQUELCH CONTROL	
26	SPARE	
27	+27.5 V G.S. RCVR ON OR STANDBY RELAY	
28	115 V AC 300-1000 CPS	
A1	COAX ANTENNA INPUT	

Figure 2-1. Receiver 51X-2, Outline and Mounting Dimensions

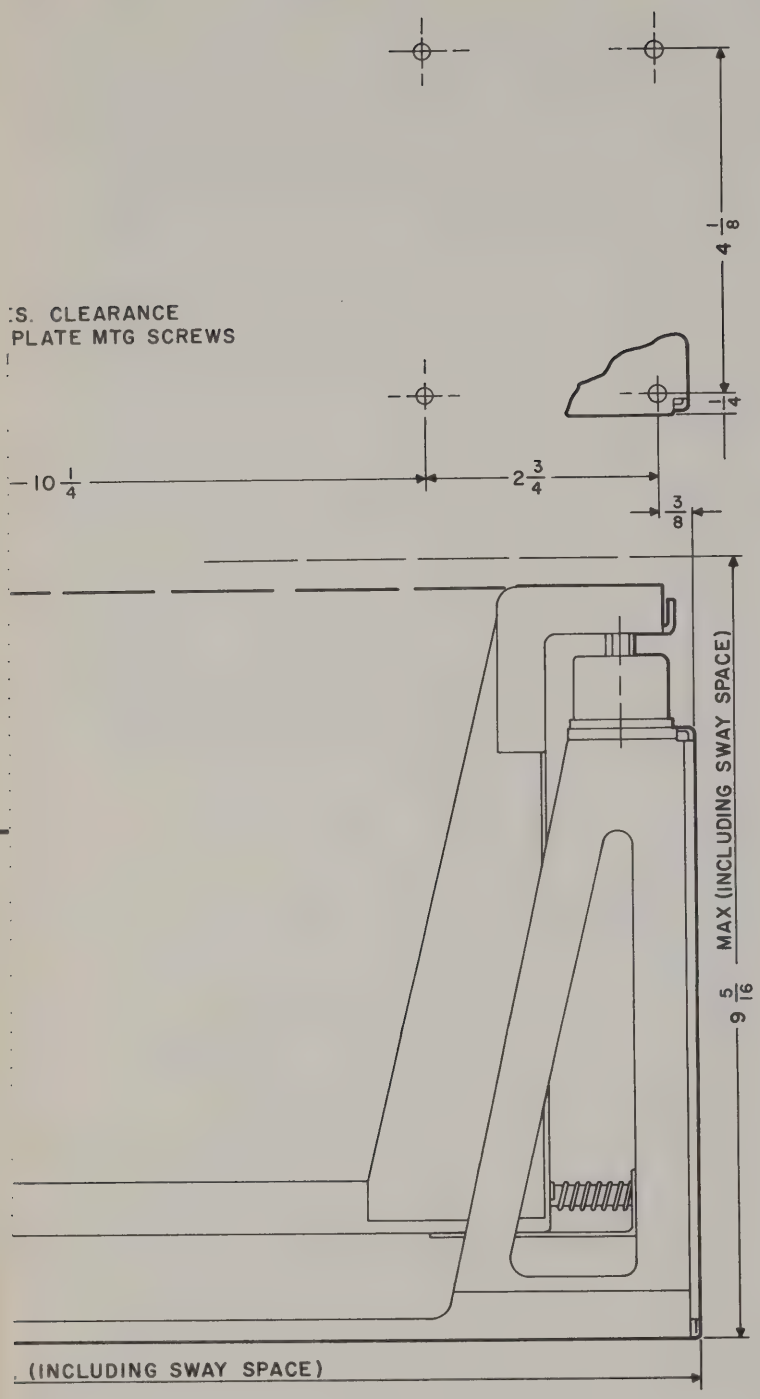
:S. CLEARANCE
PLATE MTG SCREWS
4 1/8
1/4
10 1/4
2 3/4
3/8
9 5/16 MAX (INCLUDING SWAY SPACE)
(INCLUDING SWAY SPACE)

To aid the airframe manufacturer in balancing air flow to equipments in air-cooled racks, four component surface temperatures are provided.

When the surface temperatures of the following components (measured as specified) are as listed below, the air flow rate to this equipment is approximately 30 pounds per hour per 100 watts. These temperatures are based on an ambient of 30°C and an inlet air temperature of 25°C.

2.3.4 OPERATION OF TWO 51X-2 RECEIVERS ON THE SAME ANTENNA.

If it is desired to operate two 51X-2 Receivers on the same antenna in the 108 to 118 mc region, the receivers should be connected to the antenna as shown in figure 2-3.

Each coaxial lead between the T-connector and Receiver 51X-2 must be cut to an odd quarter wave length to prevent the T-connector from appearing as a short when the receivers are tuned to different frequencies.

The length of coax which satisfies the requirements is 30.5 inches plus any number (n) up to 5 of 35-inch increments. The 30.5 added to the 22 inches of coaxial line inside Receiver 51X-2 gives 52.5 or 3/4 wave length at 113 mc. The additional 35-inch lengths are equal to 1/2 wave length at 113 mc, hence any number up to 5 may be used and still will give an odd 1/4 wave length. It is not necessary to have equal (n) length from each receiver to the tee.

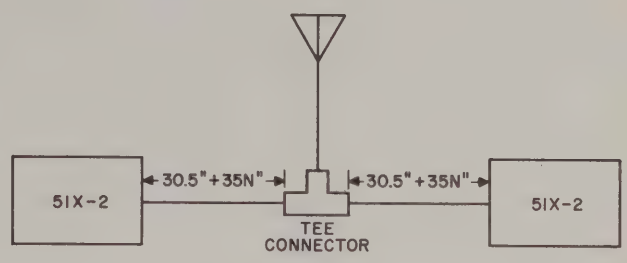

Figure 2-3. Dual 51X-2 Installation with One Antenna, Block Diagram

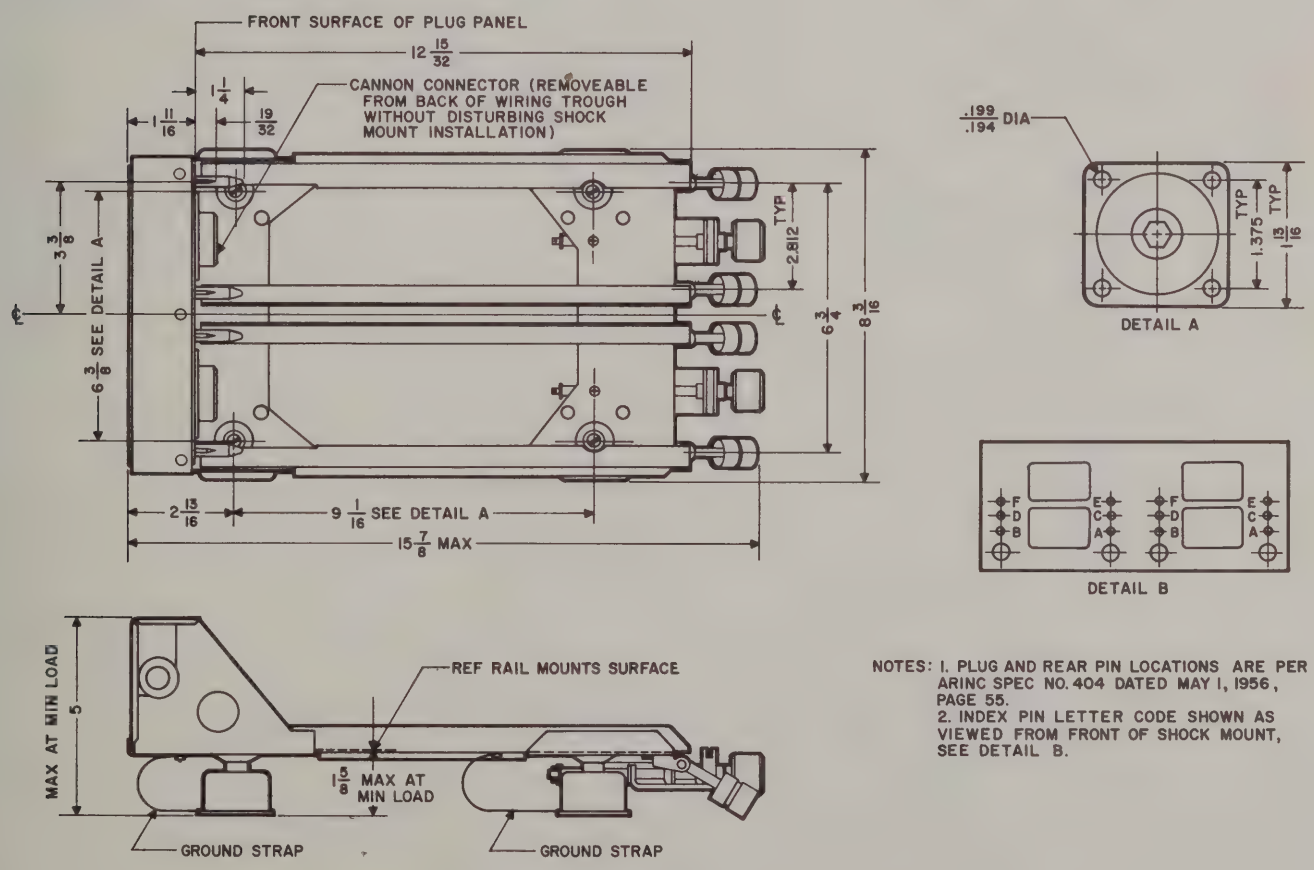

Figure 2-4. Dual Shockmount 390E-1, Outline and Mounting Dimensions

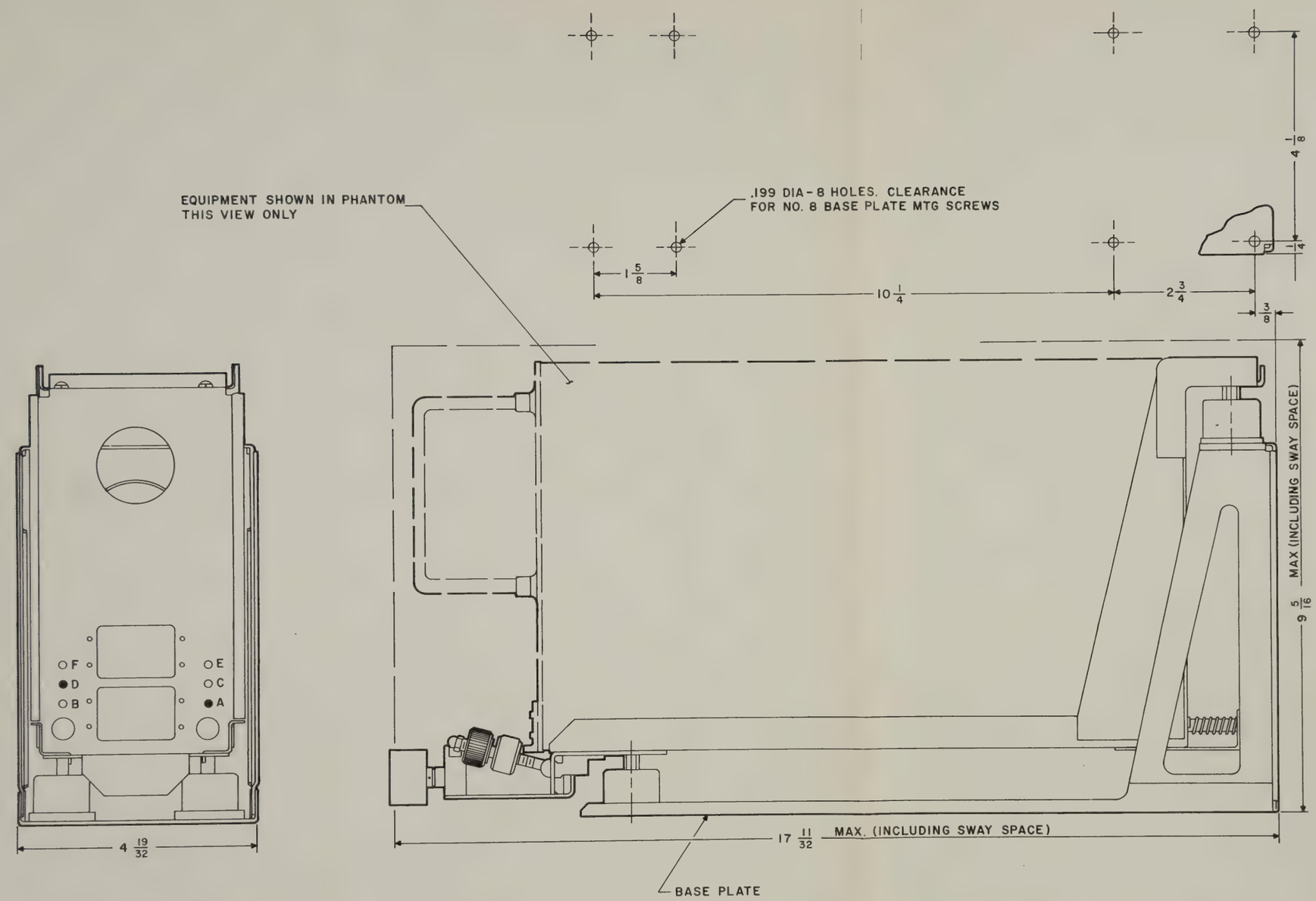

NOTE:

1. INDEX PIN LETTER CODE SHOWN AS VIEWED FROM FRONT OF SHOCKMOUNT. REF: ARINC SPEC NO. 404, DATED MAY 1, 1956 PAGE 55. INDEX PINS ARE TO BE LOCATED IN POSITIONS A AND D AS SHOWN.

Figure 2-2. Shockmount 349H-4, Outline and Mounting Dimensions

To aid the airframe manufacturer in balancing air flow to equipments in air-cooled racks, four component surface temperatures are provided.

When the surface temperatures of the following components (measured as specified) are as listed below, the air flow rate to this equipment is approximately 30 pounds per hour per 100 watts. These temperatures are based on an ambient of 30°C and an inlet air temperature of 25°C.

2.3.4 OPERATION OF TWO 51X-2 RECEIVERS ON THE SAME ANTENNA.

If it is desired to operate two 51X-2 Receivers on the same antenna in the 108 to 118 mc region, the receivers should be connected to the antenna as shown in figure 2-3.

Each coaxial lead between the T-connector and Receiver 51X-2 must be cut to an odd quarter wave length to prevent the T-connector from appearing as a short when the receivers are tuned to different frequencies.

The length of coax which satisfies the requirements is 30.5 inches plus any number (n) up to 5 of 35-inch increments. The 30.5 added to the 22 inches of coaxial line inside Receiver 51X-2 gives 52.5 or 3/4 wave length at 113 mc. The additional 35-inch lengths are equal to 1/2 wave length at 113 mc, hence any number up to 5 may be used and still will give an odd 1/4 wave length. It is not necessary to have equal (n) length from each receiver to the tee.

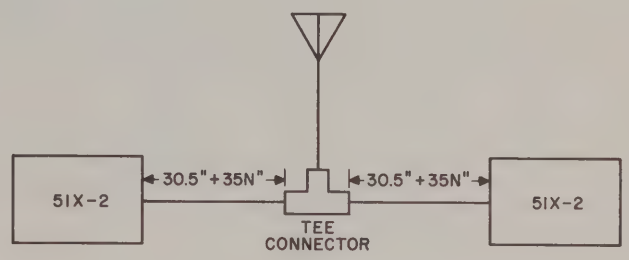

Figure 2-3. Dual 51X-2 Installation with One Antenna, Block Diagram

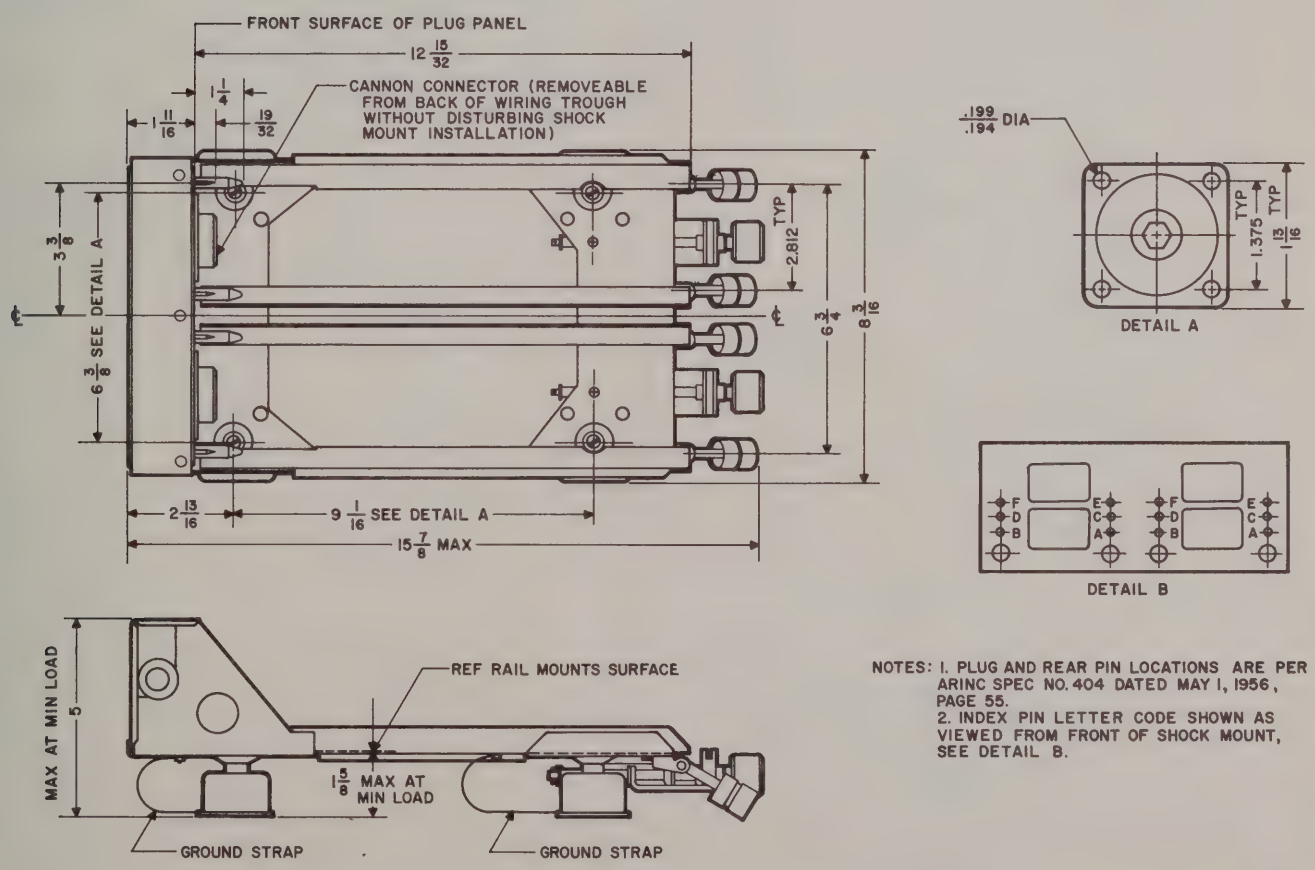

Figure 2-4. Dual Shockmount 390E-1, Outline and Mounting Dimensions

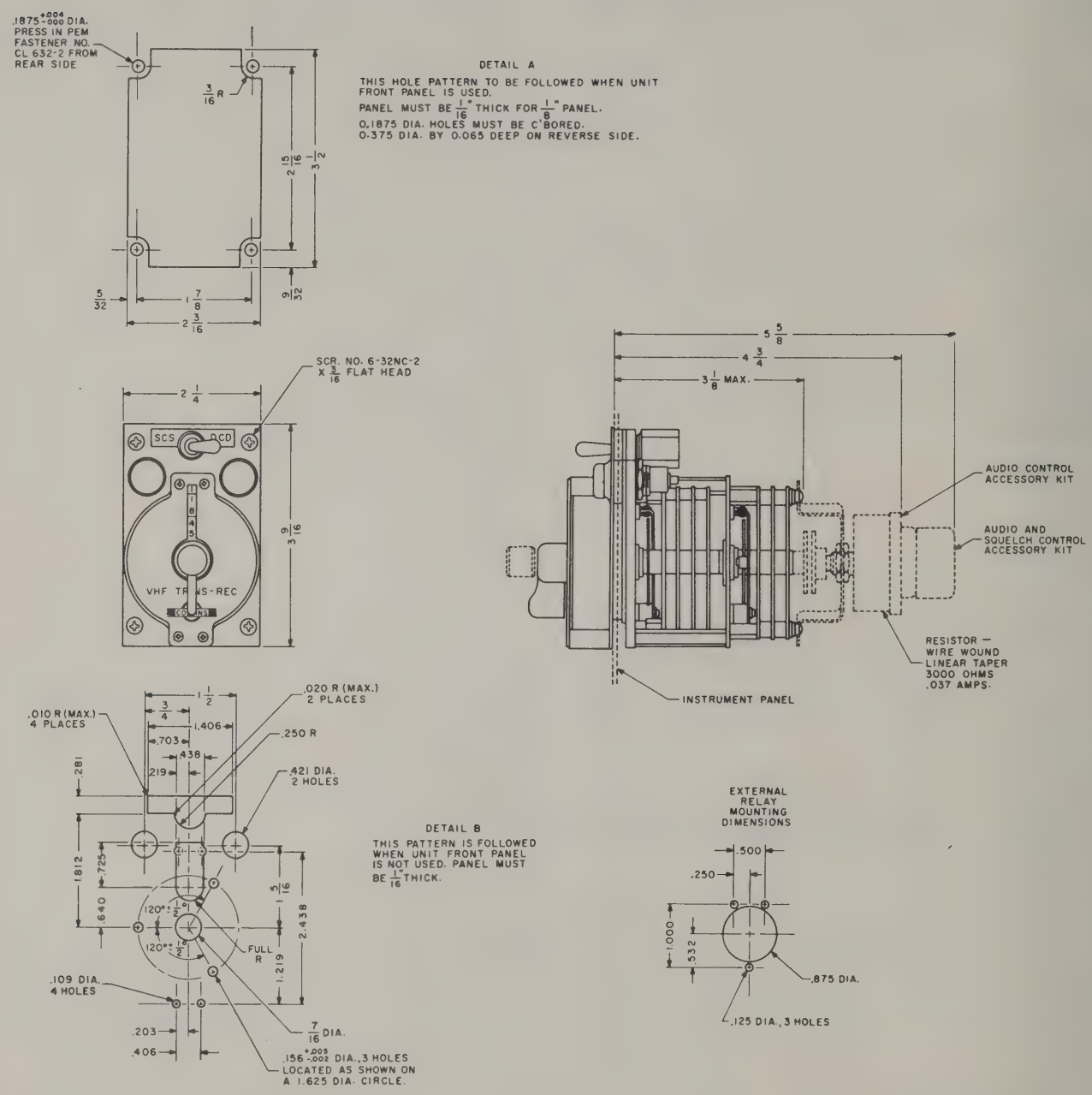

Figure 2-5. Control Unit 614X-1, Outline and Mounting Dimensions

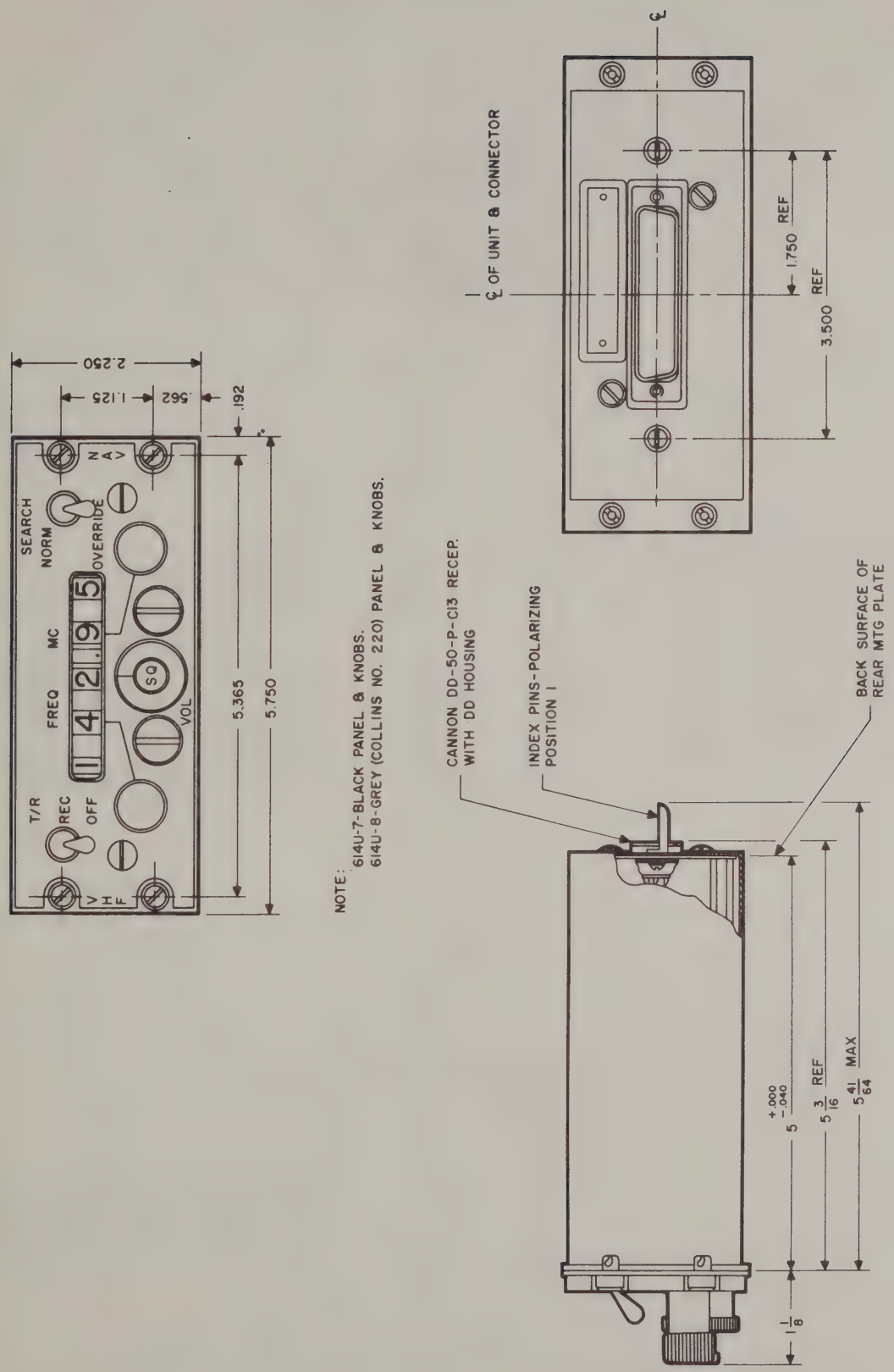

Figure 2-6. Control Units 614U-7/8, Outline and Mounting Dimensions

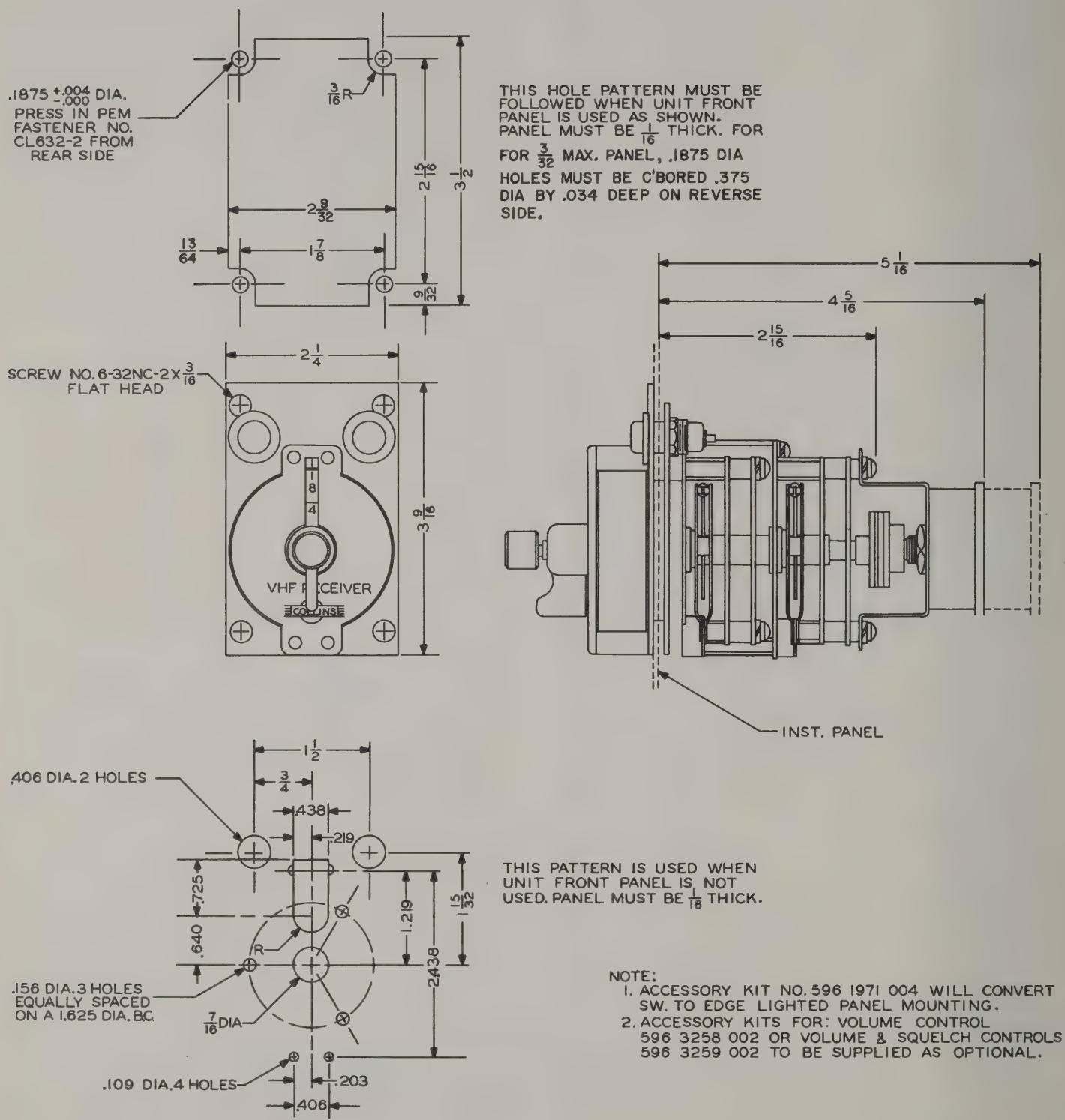

Figure 2-7. Control Unit 314U-10, Outline and Mounting Dimensions

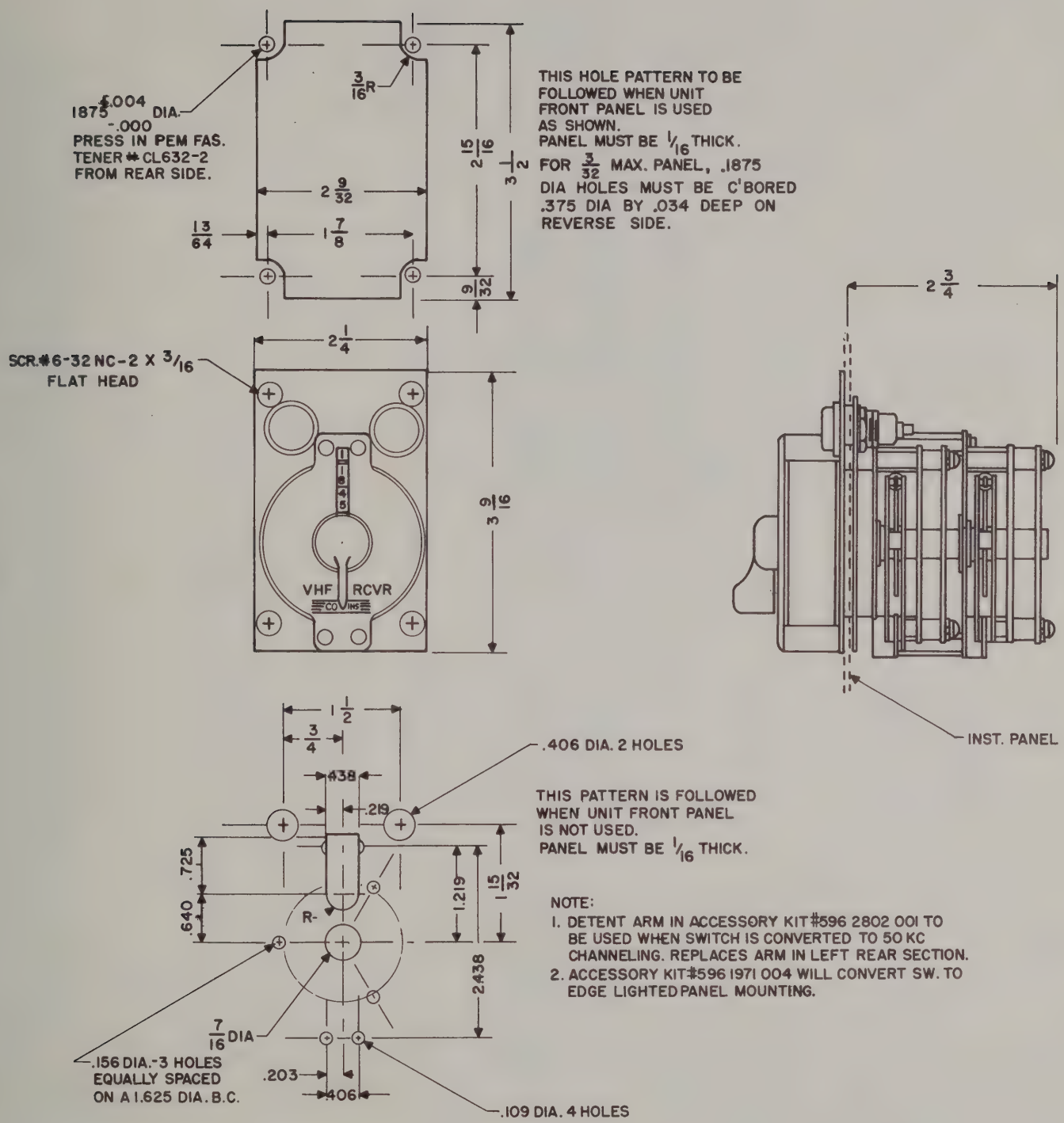

Figure 2-8. Control Unit 614G-1, Outline and Mounting Dimensions

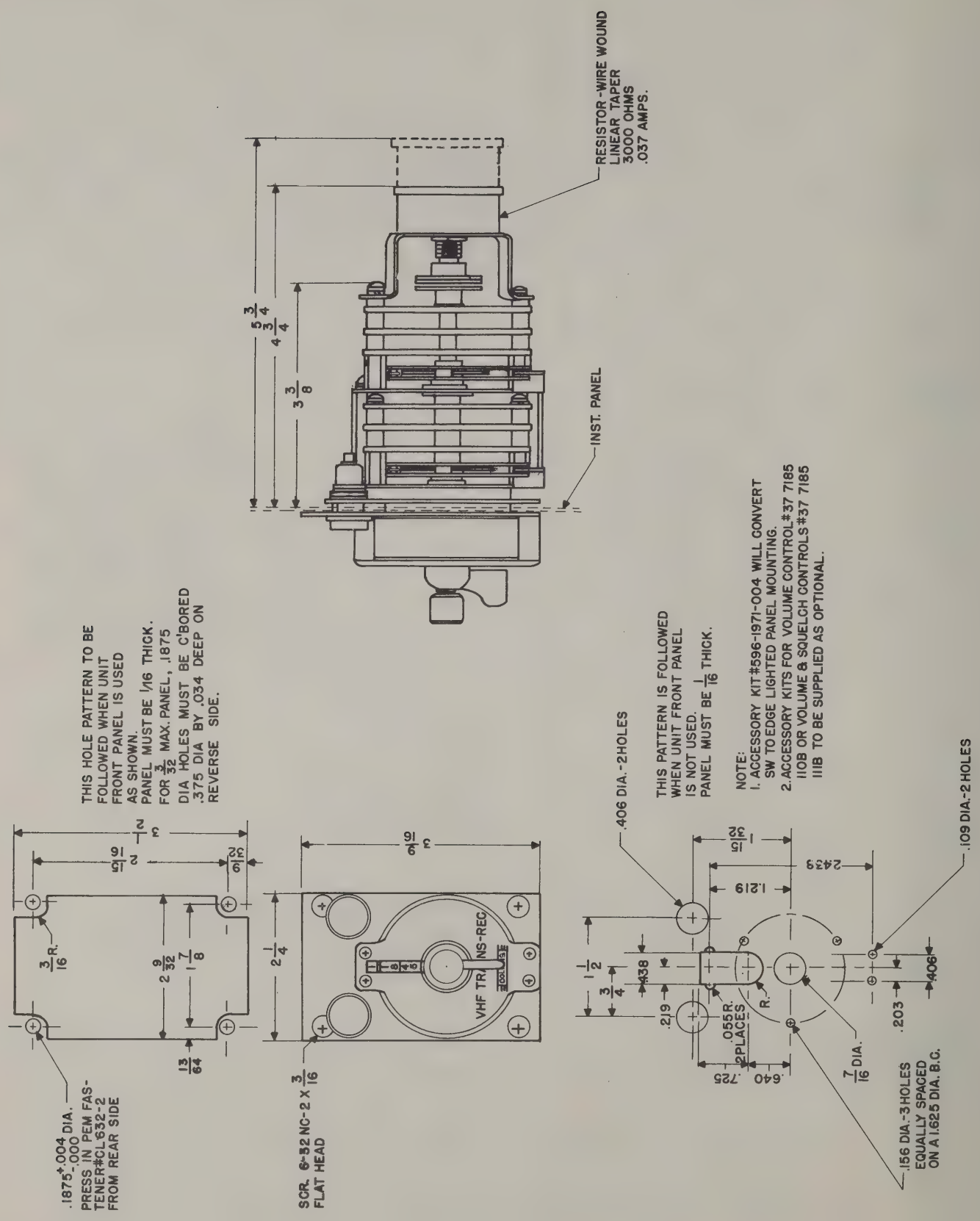

Figure 2-9. Control Unit 614F-1, Outline and Mounting Dimensions

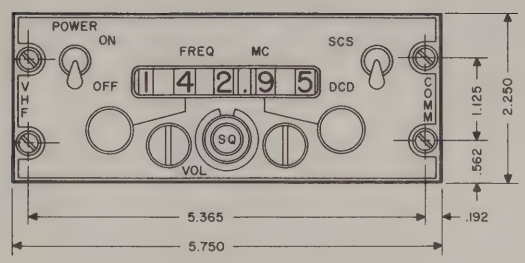

NOTE:
614U-1-BLACK PANEL & KNOBS.
614U-2-GREY (PER FULLER DIO-38415 NON-SPECULAR) PANEL & KNOBS.

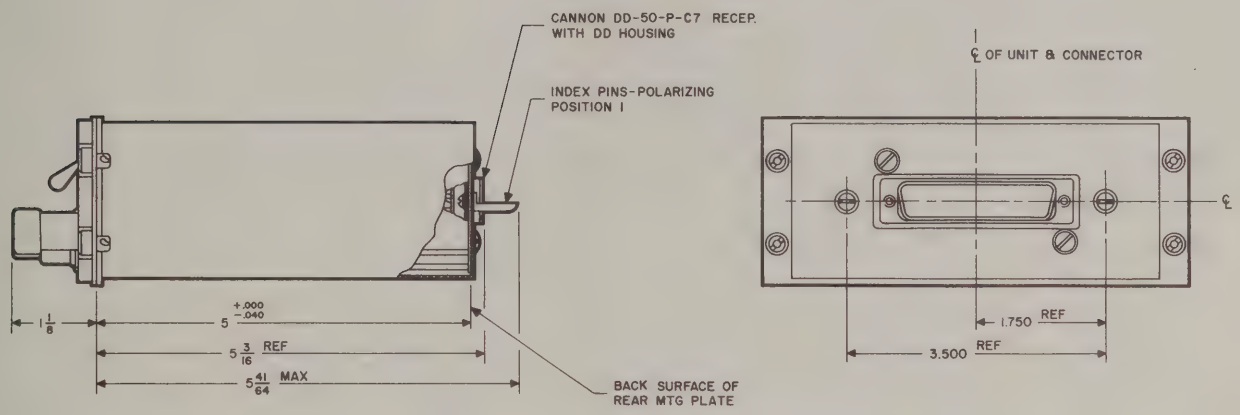

Figure 2-10. Control Unit 614U-1/2, Outline and Mounting Dimensions

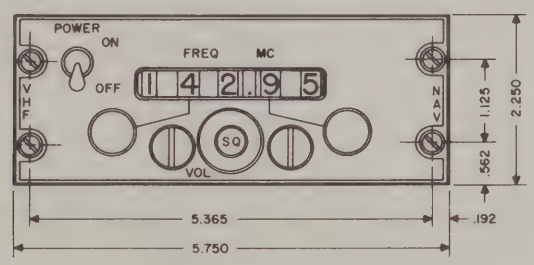

NOTE:
614U-3-BLACK PANEL & KNOBS.
614U-4-GREY (PER FULLER DIO-38415 NON-SPECULAR) PANEL & KNOBS.

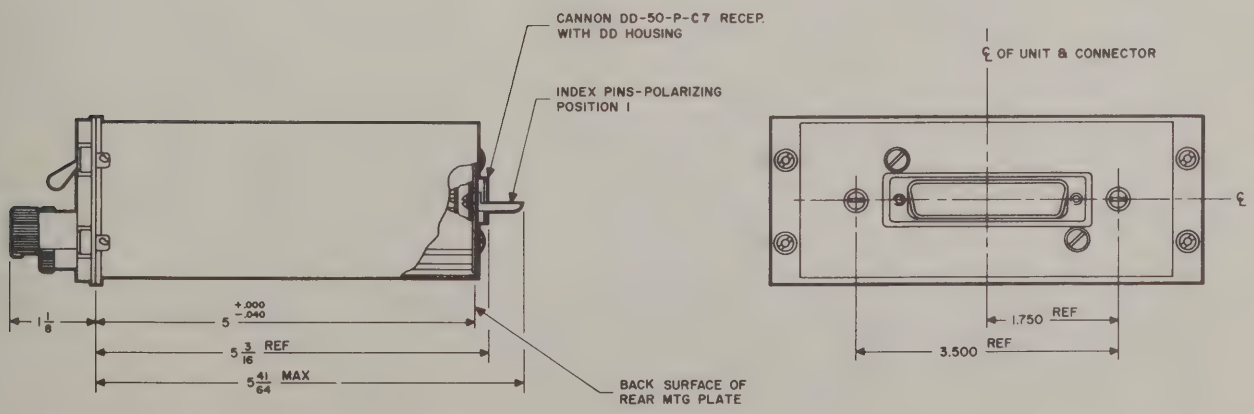

Figure 2-11. Control Unit 614U-3/4, Outline and Mounting Dimensions

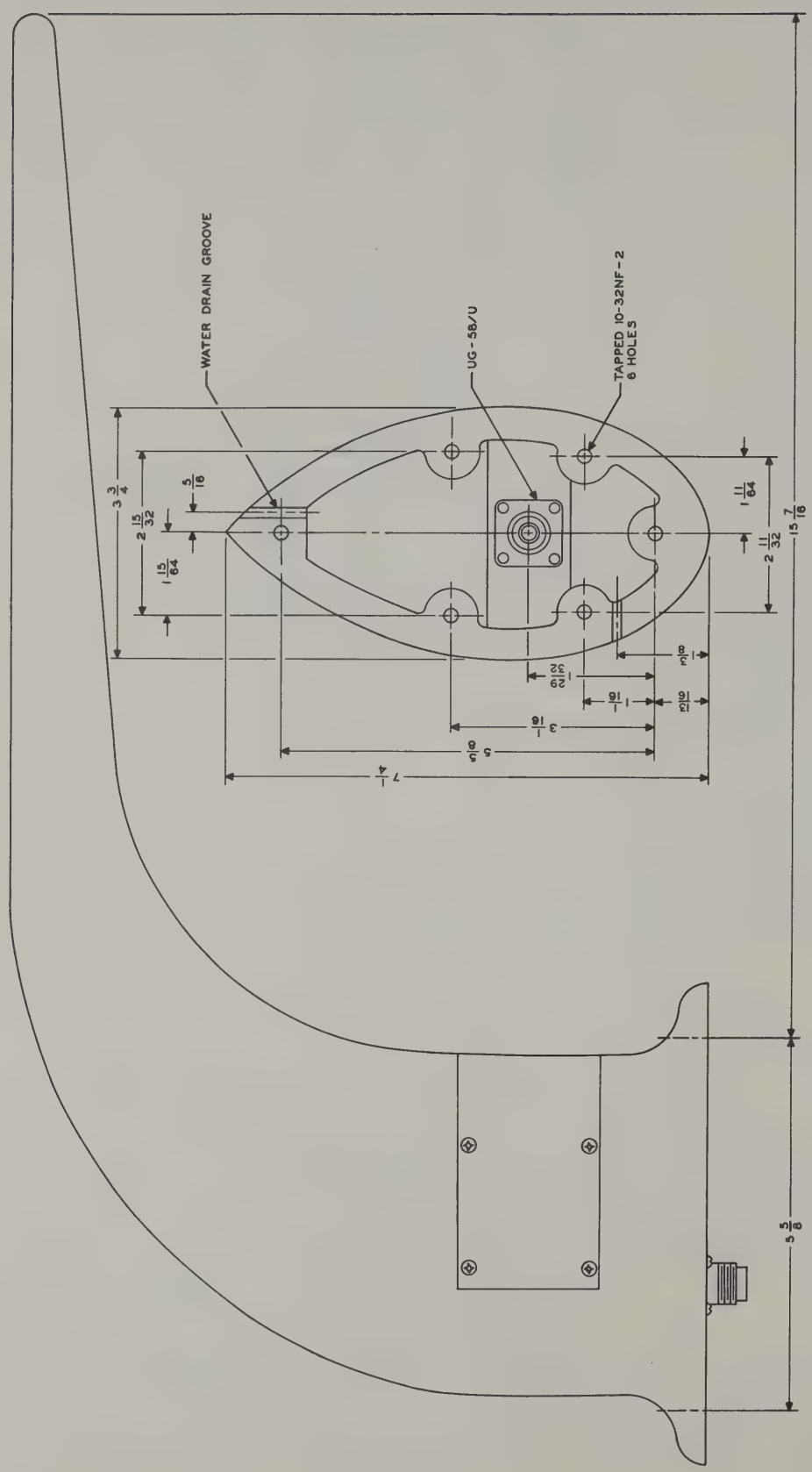

Figure 2-12. Antenna 37R-1, Outline and Mounting Dimensions

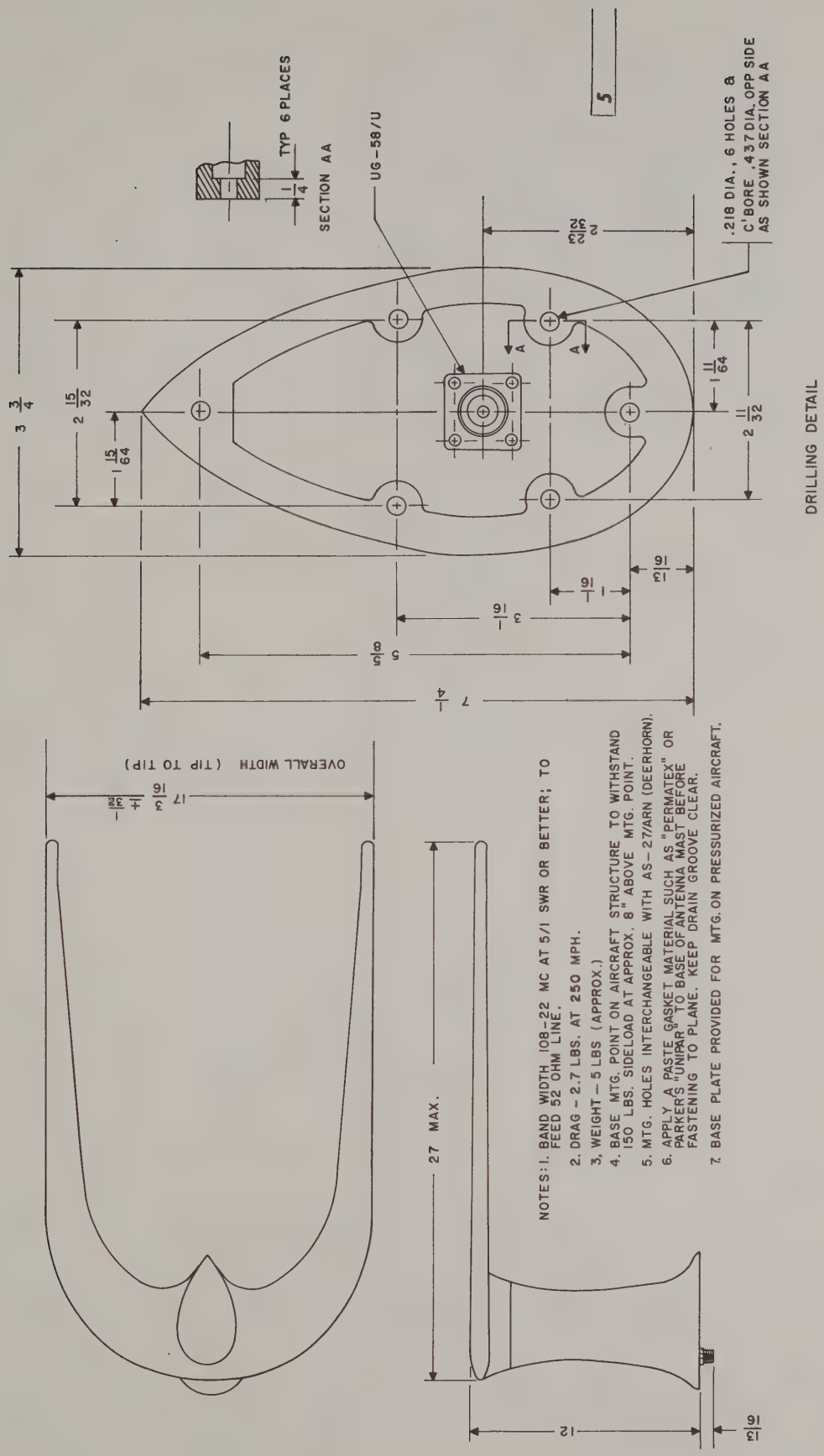

Figure 2-13. Antenna 37J-3, Outline and Mounting Dimensions

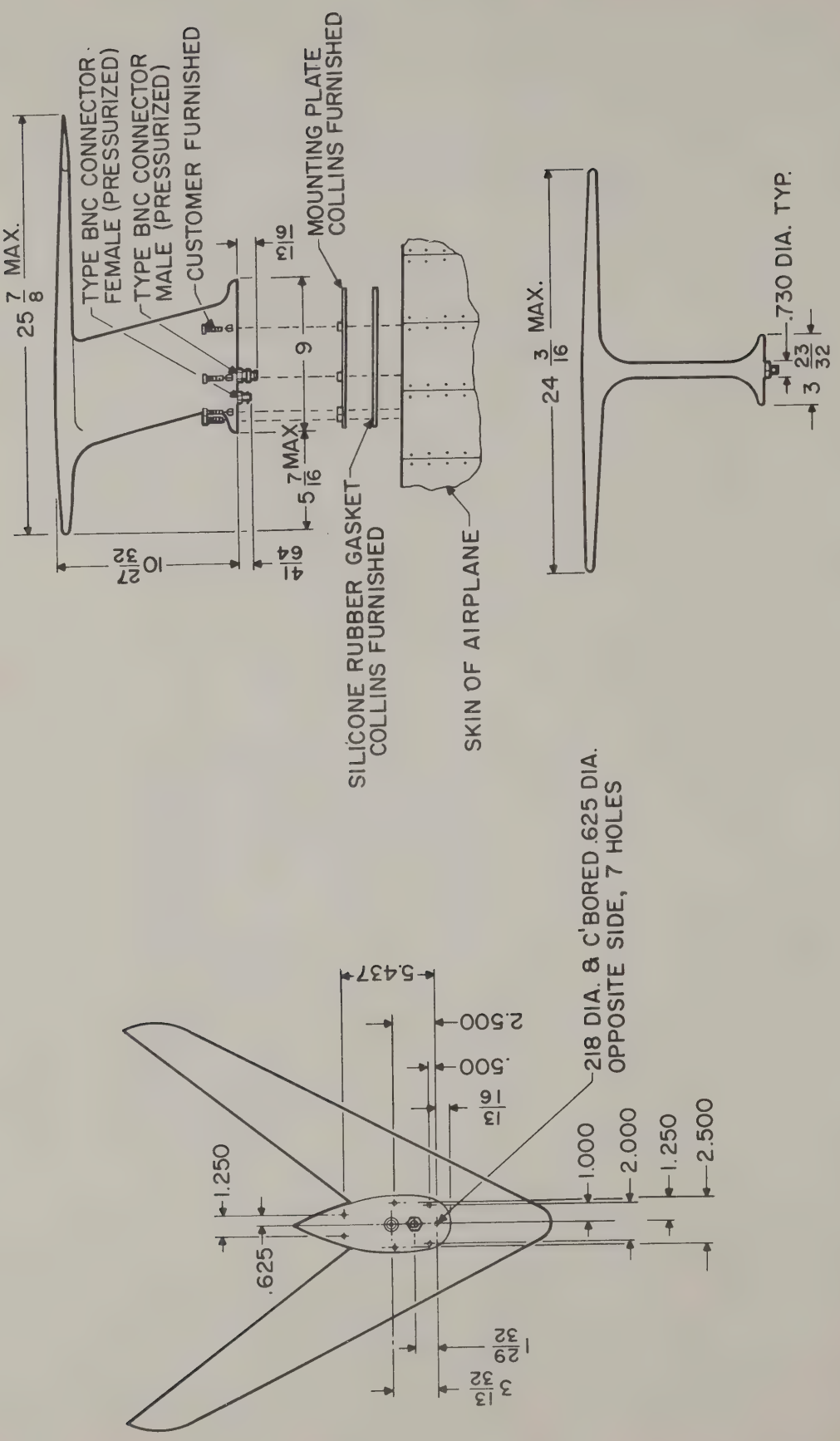

Figure 2-14. 137X-1 Antenna, Outline and Mounting Dimensions

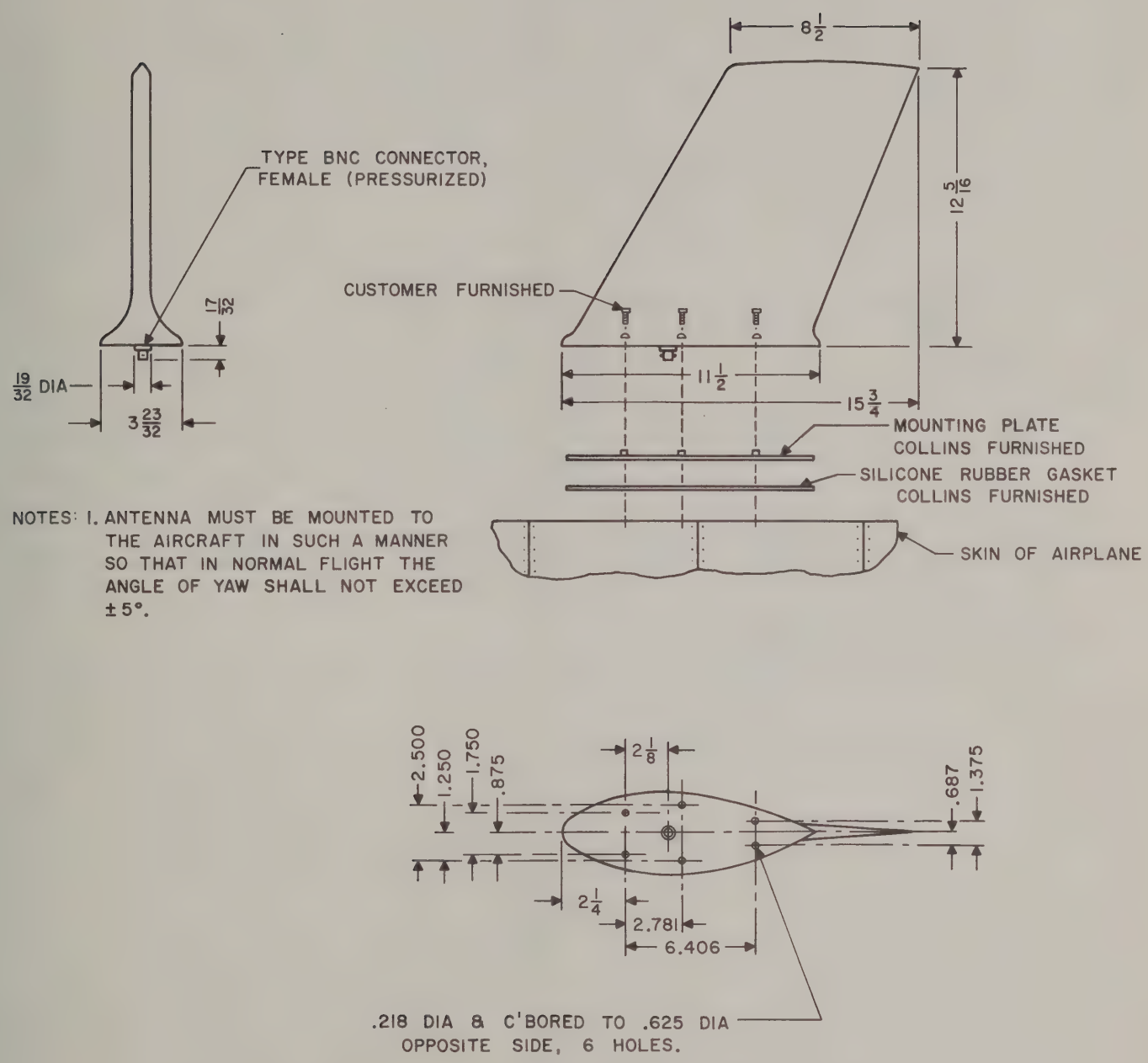

Figure 2-15. 37R-2 Antenna, Outline and Mounting Dimensions

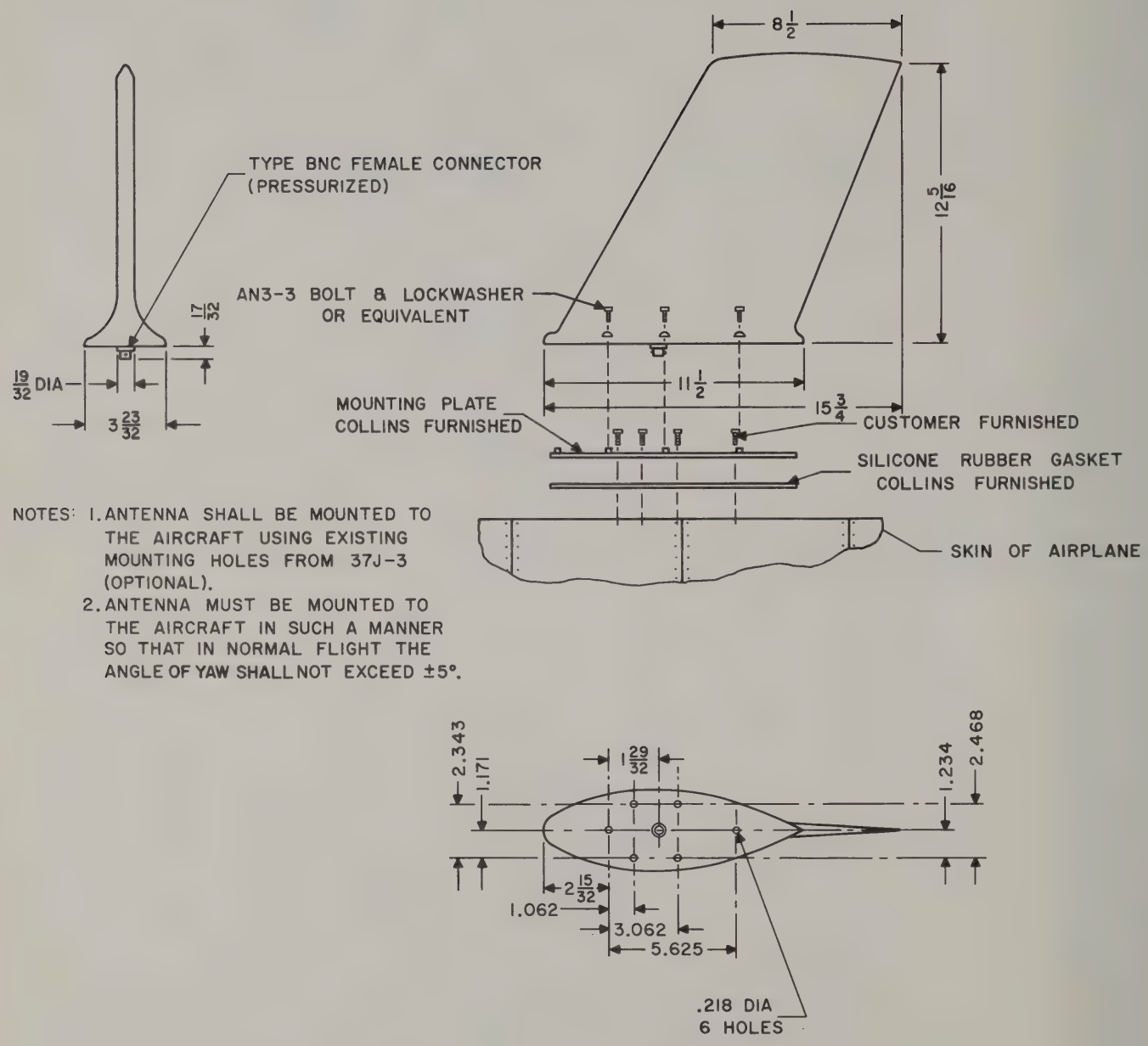

NOTES: 1. ANTENNA SHALL BE MOUNTED TO THE AIRCRAFT USING EXISTING MOUNTING HOLES FROM 37J-3 (OPTIONAL).
2. ANTENNA MUST BE MOUNTED TO THE AIRCRAFT IN SUCH A MANNER SO THAT IN NORMAL FLIGHT THE ANGLE OF YAW SHALL NOT EXCEED ±5°.

Figure 2-16. 37R-2 Antenna, Outline and Mounting Dimensions
(Replacement of 37J-3)

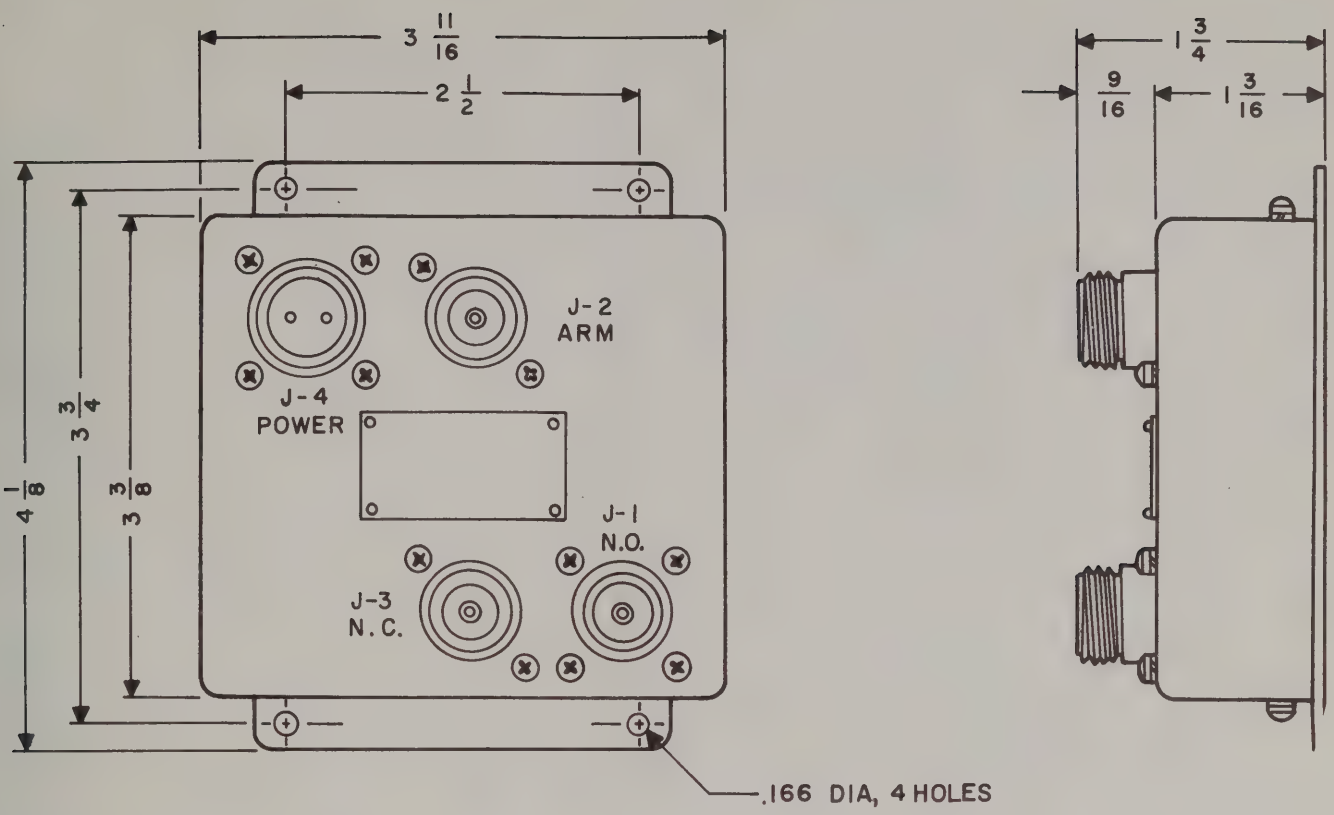

MOUNTING DIMENSIONS — TYPE 68U-1 RELAY

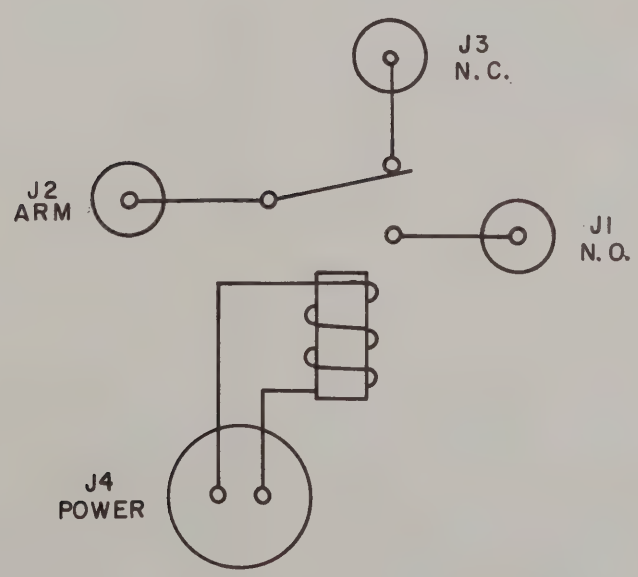

CIRCUIT DIAGRAM — TYPE 68U-1 RELAY

Figure 2-17. 68U-1 Coaxial Relay, Installation and Circuit Diagram

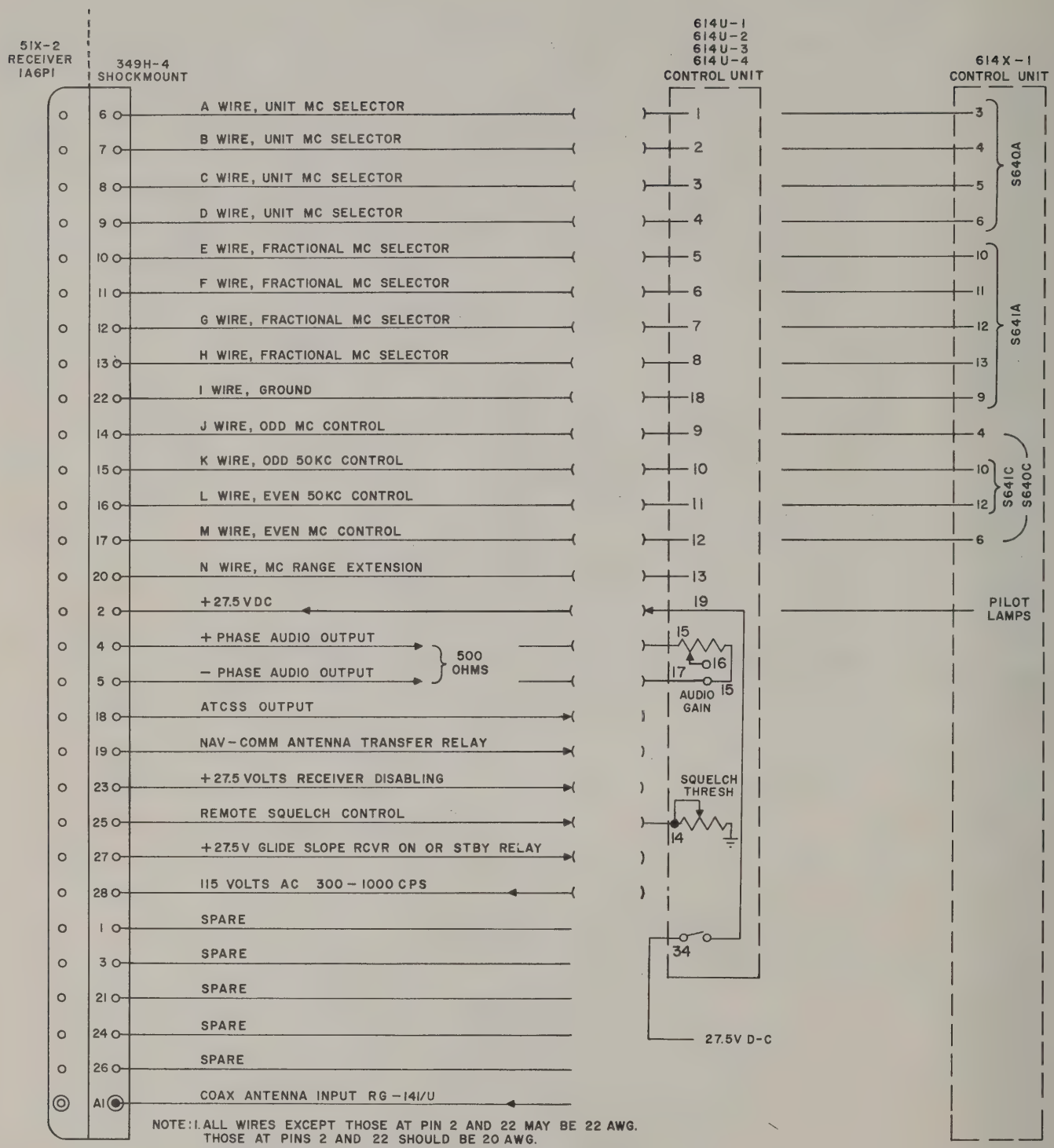

NOTE: 1. ALL WIRES EXCEPT THOSE AT PIN 2 AND 22 MAY BE 22 AWG. THOSE AT PINS 2 AND 22 SHOULD BE 20 AWG.

2. THE RECOMMENDED REMOTE SQUELCH CONTROL IS A 10,000 OHM F TAPER (CCW LOG) POTENTIOMETER.

3. THE + PHASE AUDIO OUTPUT WIRE IS IN PHASE (AT 1000 CPS) WITH THE DEMODULATED OUTPUT OF A BOONTON 211A SIGNAL GENERATOR.

4. THE ATCSS OUTPUT IS USED AS A VOR SIGNAL OUTPUT WHEN THE RECEIVER IS CONNECTED TO A 344B INSTRUMENTATION UNIT.

Figure 2-18. 51X-2, External Wiring Diagram

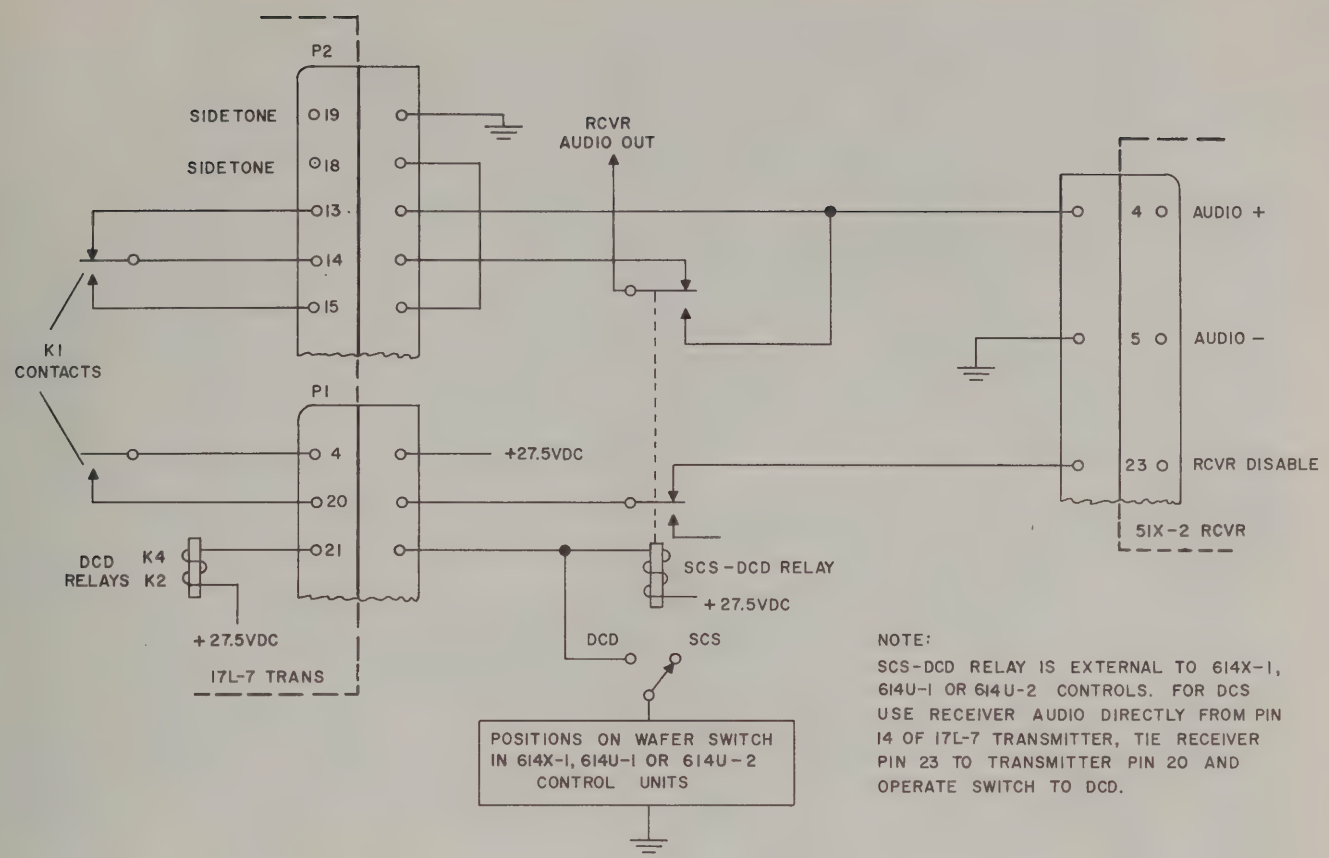

Figure 2-19. Interconnection Diagram for Receiver 51X-2, Transmitter 17L-7 and Control Units 614X-1, and 614U-1/2 for DCD Operation

2.3.5 TEST METHOD.

2.3.5.1 INSTRUMENTATION TECHNIQUE. In order to use the preceding temperature information, the following thermocouple technique must be used:

a. Use no. 30 gauge copper constantan or iron constantan thermocouple wire. Thermocouple wire may be purchased from Thermo Electric, Saddle Brook, New Jersey.

b. Strip the thermocouple wires back 1/4 to 3/8 inch.

c. Twist the bare ends together as tightly as possible without damaging the wire.

d. Trim the twisted ends so that there are 1-1/2 to 2 turns of twisted wire.

e. Weld the thermocouple as follows: Secure an alligator clip just back of the twisted ends but still on the uninsulated portion of the wire. The thermocouple wires form one electrode in the welding process. The other electrode is made from a carbon rod (center rod from 1-1/2-volt penlight cell). Connect a 2.5-amp, 10-ohm, wire-wound rheostat in series with a 28-v d-c source (see figure 2-20). Briefly touch the carbon rod to the end of the thermocouple wire to form a weld. Adjust rheostat to obtain a good weld. The bead formed should be spherical in shape and its diameter about three times the diameter of the wire.

f. Carefully untwist the wires so that the two wires touch each other only at the welded junction--THIS IS VERY IMPORTANT.

g. Secure the insulated portion of the thermocouple to the chassis. Retain in position by tying or gluing with Armstrong A-2 cement. Armstrong A-2 may be purchased from Armstrong Products Company, Argonne Road, Warsaw, Indiana.

h. Next form the thermocouple wire so that the springiness of the leads holds the thermocouple

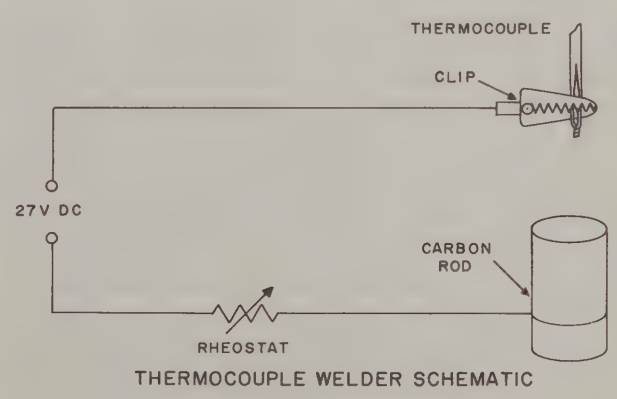

Figure 2-20. Thermocouple Welding Schematic

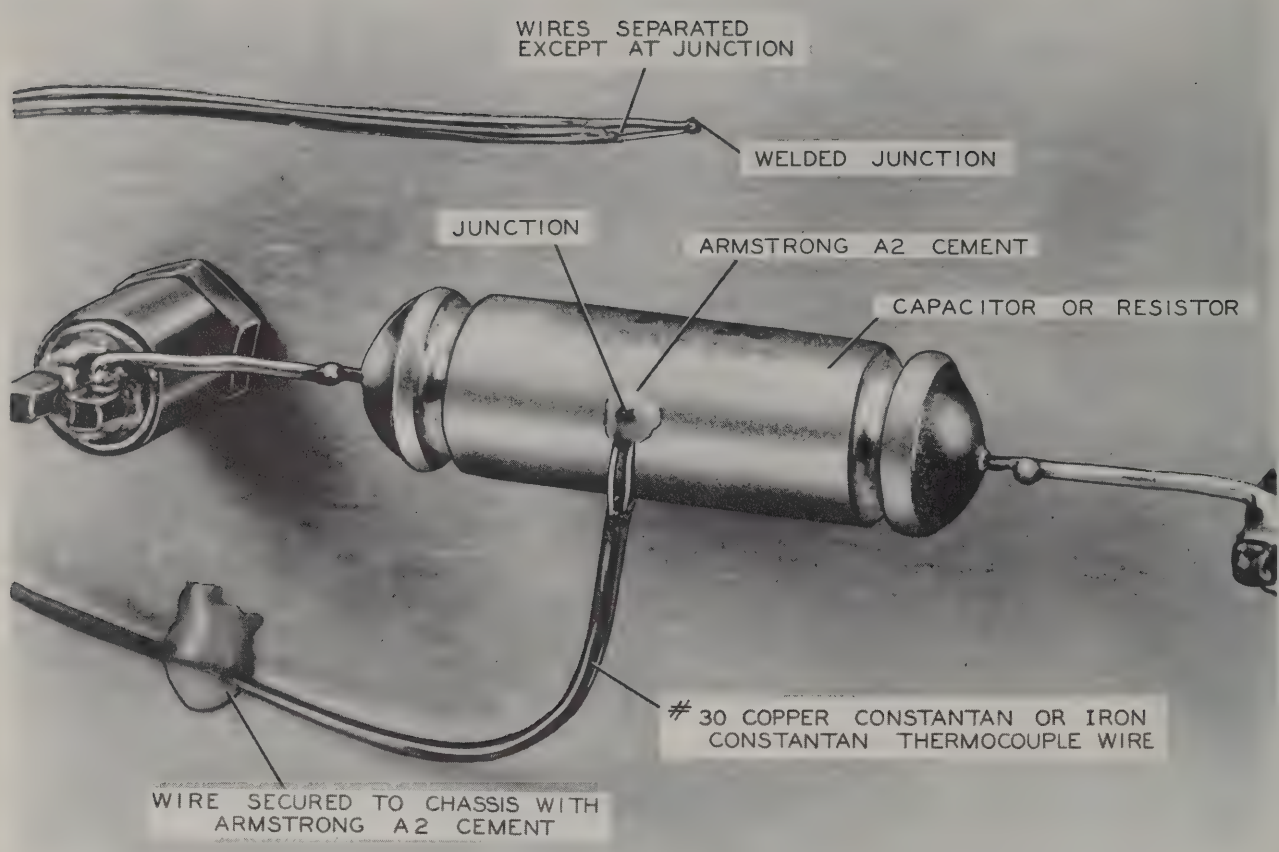

Figure 2-21. (Top) Welded Thermocouple and (Bottom) the Placement of a Thermocouple on a Typical Component

junction in tight contact with the component. Cover the thermocouple junction with a drop of Armstrong A-2 cement to hold it securely in place. (See figure 2-21.)

2.3.5.2 TEMPERATURE MEASUREMENT. There are a number of standard methods by which the thermal emf of thermocouples can be measured and interpreted in terms of a value on a temperature scale. The most convenient method for electronic equipment is the potentiometer method. A variety of instruments operating on this principle are commercially available. It is recommended that a direct reading, hand-balanced potentiometer of the type made by Leeds and Northrup or Barber-Coleman Company be used.

2.3.5.3 OPERATION CONDITIONS. Since the surface temperatures listed are to be used in the evaluation of steady-state operation, it is important that all measurements be made under equilibrium conditions. It is understood, therefore, that all tests run should be of sufficient duration to insure thermal equilibrium. Usually this takes a minimum of two hours. Temperatures should be monitored every 15 minutes to see if the equipment has reached steady-state conditions.

The input voltage for this test is 27.5 v d-c and 115 v 400 cycles a-c.

2.3.6 PRESSURE DROP.

Figure 2-22 is a plot of the relationship of corrected pressure drop in inches of water to air flow in pounds per hour per 100 watts. Another curve at 80°F (26.7°C) and 8000-foot altitude is included in this graph.

2.4 ADAPTER KIT 49T-2.

Adapter Kit 49T-2 (see figure 2-24) adapts the 51X-2 Receiver to the mounting and external circuitry of a 51X-1 or 51X-1A installation. It consists of a 1/2 ATR long case outfitted with proper plugs, jacks, and wiring so that Receiver 51X-2 can be modified slightly at the front panel and slipped into the case and then the whole unit inserted into a

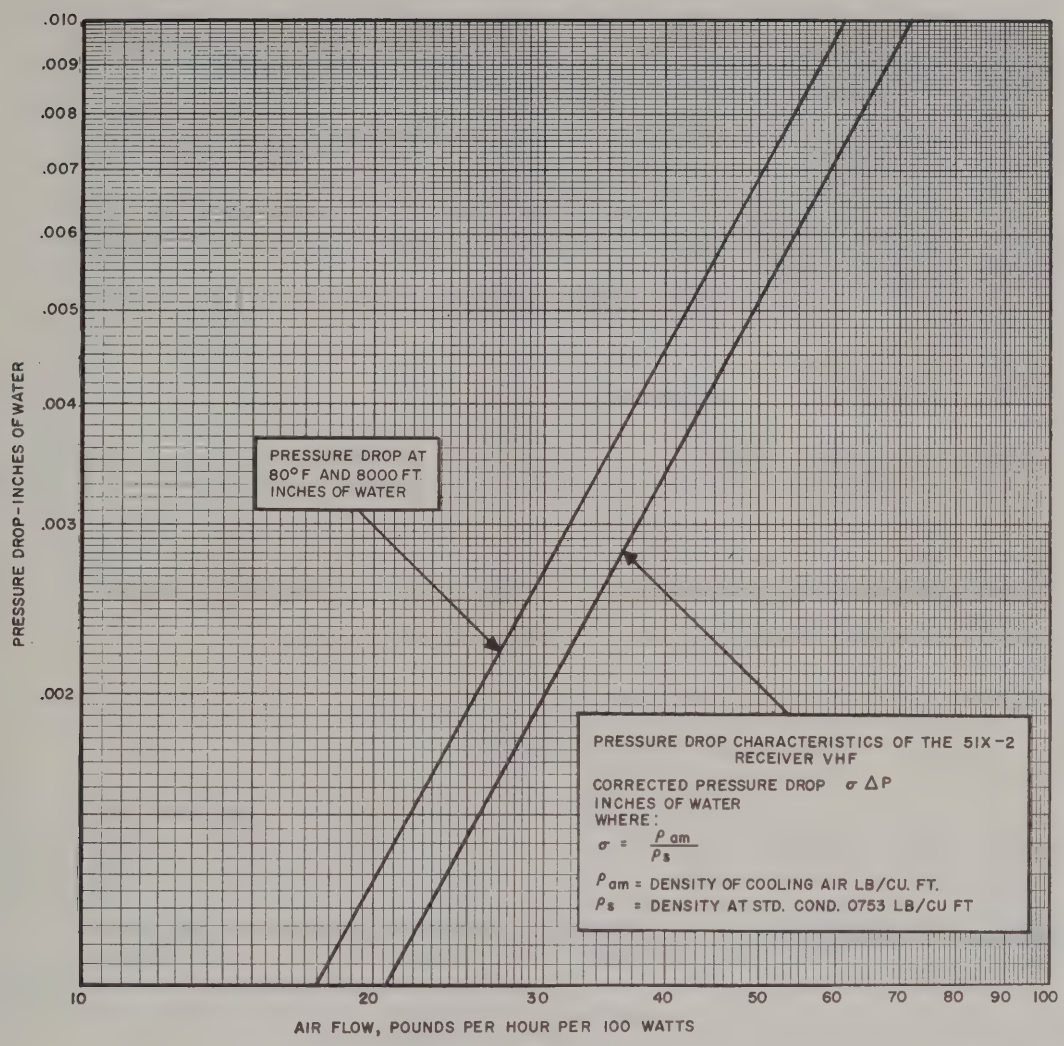

Figure 2-22. Relationship of Pressure Drop to Air Flow

shockmount or rack in the place of Receiver 51X-1 or 51X-1A. The case is wired completely with plugs and jacks to accommodate the 51X-2. See the wiring diagram, figure 2-23. The antenna connection is brought out to a receptacle on the front panel in approximately the same position as that of the 51X-1. No changes in external circuitry are necessary.

2.4.1 EQUIPMENT SUPPLIED.

Adapter Kit 49T-2 consists of the following:

a. A 1/2 ATR long case equipped with front antenna receptacle for coaxial plug and converted to accept Receiver 51X-2.
b. Front panel adapter plate for attaching to the front panel of Receiver 51X-2.

2.4.2 51X-2 MODIFICATION PROCEDURE.

a. Remove the case (if supplied) from Receiver 51X-2.
b. Remove the name plate from Receiver 51X-2.
c. Remove the rack mounting hooks from Receiver 51X-2.
d. Remove the front panel adapter plate from its plastic bag, and set it in position on the front of the 51X-2 over the name-plate holes. The twist lock fastener should be in the upper left-hand position.
e. Insert new, longer screws through the rack mounting hooks and through the front panel adapter plate. Install one hook at the extreme right end and one at the extreme left end of the adapter plate. Align the name-plate mounting holes, and tighten the screws.
f. Attach the name plate with new, longer screws.

2.4.3 ASSEMBLING 51X-2 INTO CASE.

a. Insert the 51X-2 into the new 1/2 ATR case, and carefully engage the rear plug. If the plug seats before the rear of the front panel of the 51X-2 is flush with the front edge of the case, remove the receiver, and remove the two shims from between receptacle J1 and the rear bracket.
b. Reassemble receptacle J1, and again insert the receiver into the case. If the rear of the front

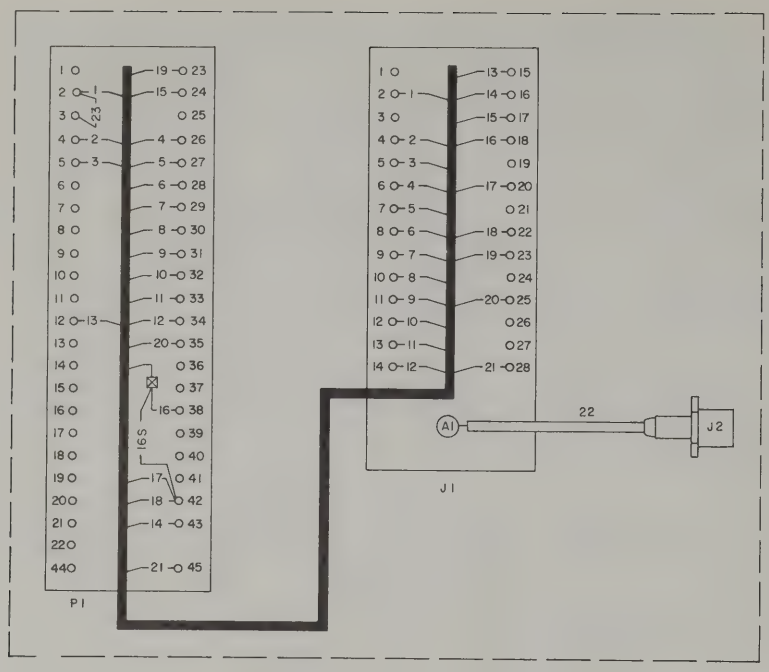

WIRE CHART

WIRE NO.	WIRE CODE	TO	FROM
1	TB902	P1-2	J1-2
2	TV93	P1-4	J1-4
3	TV95	P1-5	J1-5
4	TA935	P1-26	J1-6
5	TA936	P1-27	J1-7
6	TA956	P1-28	J1-8
7	TA9023	P1-29	J1-9
8	TA9125	P1-30	J1-10
9	TA9126	P1-31	J1-11
10	TA9235	P1-32	J1-12
11	TA9236	P1-33	J1-13
12	TA9026	P1-34	J1-14
13	TA9256	P1-12	J1-15
14	TA9356	P1-43	J1-16
15	TA9123	P1-24	J1-17
16	TVS906	P1-38	J1-18
16S	TVO	P1-42	NOT CONNECTED
17	TA9025	P1-42	J1-20
18	TBO	P1-42	J1-22
19	TV903	P1-23	J1-23
20	TV4	P1-35	J1-25
21	TV8	P1-45	J1-28
22	COAX	J2	J1-A1
23	BA	P1-2	P1-3

Figure 2-23. Adapter Kit 49T-2, Wiring Diagram

panel is flush with the case front edge, turn the rear and the front twist lock fasteners to secure the receiver in the case.

c. Set the receiver and case into the associated shockmount or rack, engage the rear connector, and secure with fasteners over the front rack mounting hooks.

d. Attach the antenna to the antenna receptacle.

2.5 PREINSTALLATION CHECKS AND INITIAL ADJUSTMENTS.

2.5.1 PREINSTALLATION CHECKS.

a. Measure the resistance from terminal 2 of P1 to ground (27.5 v input). This value should be approximately 12 ohms when using the d-c power supply or 2000 ohms when using the a-c power supply.

b. Measure the resistance from terminal 28 of P1 to ground (115 v input). This value should be an open circuit when using the d-c power supply or approximately 22 ohms when using the a-c power supply.

c. Measure the resistance from terminal 23 of P1 to ground (receiver disable). This value should be approximately 280 ohms with either power supply.

d. Measure the resistance from terminals 4 and 5 (audio output) to ground. There should be an open circuit to ground from both pins using either power supply.

e. Check installation of all interconnecting cables.

f. Apply voltage to the receiver, and check the tubes for dark or overly bright filaments.

g. Select several frequencies by means of the control unit, and check operation of the 0.05- and 2.0-megacycle Autopositioners (figure 3-1).

h. Plug headset into jack J1 on the front panel. If noise is not heard, press SQUELCH disable switch (figure 3-1). Listen for background noise. Adjust SQUELCH sensitivity control from its maximum to minimum limits to check operation of the squelch circuit.

i. Adjust screwdriver potentiometer R18 in the i-f and audio module (AURAL LEVEL control) to see that output varies.

2.5.2 INITIAL ADJUSTMENTS.

Adjust local SQUELCH sensitivity control to the desired squelch threshold. If a remote squelch control is used in the installation, set SQUELCH to establish the desired range of squelch adjustment at the remote control.

NOTE

Rotation of SQUELCH to its maximum clockwise limit results in minimum squelch threshold or maximum receiver sensitivity. Rotation of SQUELCH in a counterclockwise direction from this limit increases the squelch threshold, decreasing the sensitivity of the receiver.

The 51X-2 is set at the factory for 100 mw output with a 1000-uv signal modulated 30% with a 1000-cps audio signal. This setting will give a power output of approximately 50 mw in the communication band. This power output may be too high for the particular installation. If it is, adjust the AURAL LEVEL control, R18, in the i-f and audio module to a level suitable for the particular installation.

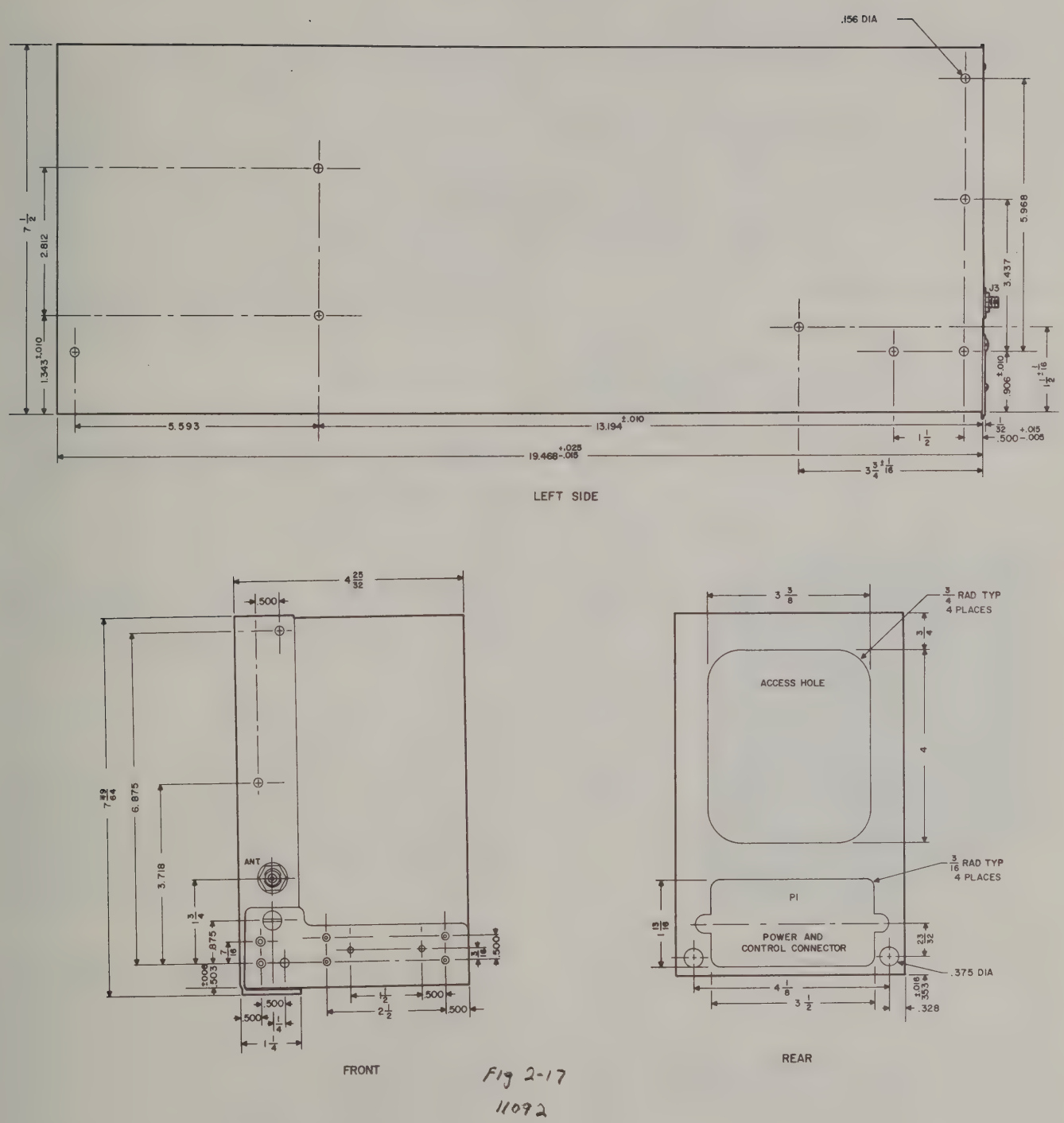

Fig 2-17
11092

Figure 2-24. Adapter 49T-2, Outline and Mounting Dimensions

SECTION III
OPERATION

3.1 PERFORMANCE AND FUNCTION OF EQUIPMENT.

Receiver 51X-2 is an airborne receiver designed to provide reception of navigation and communication signals from a ground station or other aircraft. The receiver is intended for unattended remotely controlled continuous duty in aircraft. Frequencies may be selected in 50-kc increments from 108.00 to 151.95 mc.

3.2 OPERATING CONTROLS.

See figure 3-1. Adjustments are made on the front panel and on the i-f and audio amplifier module. The remote control unit contains the frequency selector control and the remote squelch and volume controls (when used).

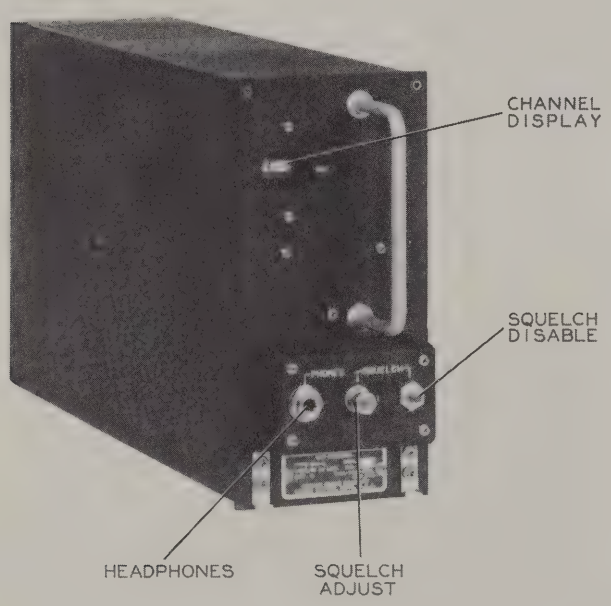

Figure 3-1. Navigation and Communications Receiver 51X-2, Front Panel

3.2.1 FREQUENCY SELECTION.

The settings of the dial on the control unit in use in the system determines the operating frequency. The dials associated with the two knobs combine to read frequency directly in megacycles and 0.05 megacycles.

3.2.2 SQUELCH CONTROL.

Potentiometer R1 (SQUELCH), located on the front panel, is a screwdriver adjustment which controls squelch sensitivity by varying cathode bias on 500-kc i-f amplifier tubes V1 and V2. Maximum squelch threshold (minimum receiver sensitivity) is obtained by rotating SQUELCH control R1 to its maximum counterclockwise position. Minimum squelch threshold (maximum receiver sensitivity) is obtained by turning SQUELCH to the limit of its clockwise rotation. SQUELCH disable switch S1 opens the squelch during testing. Pin 25 of P1 is provided to facilitate remote squelch control connections.

3.2.3 AUDIO LEVEL.

Potentiometer R18, located on the i-f and audio amplifier module, controls the audio signal applied to the first audio amplifier, V4, thus controlling the audio output level.

3.2.4 ATC LEVEL.

Potentiometer R12, located on the i-f and audio amplifier module, is connected in the detector circuit ahead of the noise limiter. The desired ATC output level is controlled by the positioning of R12.

3.3 OPERATING PROCEDURE.

3.3.1 PREFLIGHT CHECKS.

Certain operating checks should be made by the pilot or radio operator prior to actual operation. Careful observance of these procedures will reduce the chance of equipment failure in service since any abnormal condition may be reported quickly to maintenance personnel if correction is beyond the scope of the operator.

a. Check for proper connection of antenna leadin to receiver.
b. Check to see that shockmount is securely fastened and grounded to the airframe.
c. Inspect cables and connectors for broken wires, loose connections, and bent pins.
d. Turn the primary power circuit breaker on.
e. Select several channels to see that the Autopositioners are operating properly. Listen for the characteristic vhf background noise. If no background noise is heard, the SQUELCH control may be set at minimum receiver sensitivity. If the receiver is accessible, press the SQUELCH disable control. Listen for background noise. If a remote squelch control is used as part of the installation, vary this

control to check operation of the squelch circuit. (Make certain that AURAL LEVEL control R18 is not adjusted for zero audio output during this check.)

f. The best check for proper operation is reception of signals from a ground station or another aircraft.

NOTE

The aircraft should be outside the hangar when checking for proper reception.

3.3.2 EMERGENCY CHECKS AND REPAIRS.

If the receiver fails to operate during flight, the following checks may be made in an attempt to restore reception:

a. Check fuses, switches, circuit breakers, and connections in the primary power supply line.

b. Attempt operation at a different frequency by selecting another channel.

SECTION IV
PRINCIPLES OF OPERATION

4.1 ELECTRICAL DESCRIPTION, RECEIVER CIRCUITS.

4.1.1 GENERAL.

The VHF Navigation and Communications Receiver 51X-2 employs a dual-conversion superheterodyne circuit with a variable intermediate frequency and a fixed intermediate frequency followed by detector, squelch, and audio stages. Either of two power supply modules, an a-c supply or a d-c supply, may be plugged into the receiver. The receiver is capable of tuning to any of its 880 channels through information received from a remote control unit via a 13-wire cable.

The high-frequency and the low-frequency injection oscillators employ quartz crystals for frequency control. A passive filter inserted into the output of the second mixer provides passband shaping of the second i-f signal. Semiconductor diodes are employed in the detector circuit and in the avc circuit. The audio signal passes through a squelch circuit, an audio amplifier, and an audio filter to the audio output stage. The audio output stage employs a type DT4-17, PNP transistor.

Mechanical positioning of the tuning elements is accomplished by the use of two Collins Autopositioners, one for the two-megacycle increments and one for the 50-kc increments. The 50-kc positioning system and the two-megacycle system are connected through a differential mechanism so that movement of the 50-kc system is added to the movement of the two-megacycle system for purposes of tuning the variable capacitor. In this way, accurate and complete coverage of the tuning spectrum is achieved.

The receiver also provides signals and switching functions that are useful to other external units of a navigation system such as a signal for ATCSS and switching for antenna relay and VOR-ILS.

4.1.2 FREQUENCY SELECTING SYSTEM.

Refer to the block diagram, figure 4-1. The antenna coil, the grid and plate circuits of the r-f amplifier, and the grid circuit of the first mixer are tuned by a ganged tuning capacitor through the frequency range of 108.0 to 151.95 mc. The first heterodyning oscillator, tube V5, is controlled by selectable crystals. The output of this oscillator is always on the low-frequency side of the associated reception frequency. The output starts at 97.975 mc and goes through 139.975 mc on a two-megacycle basis using a total of 22 crystals. Each crystal output, when injected into the first mixer, produces a usable i-f spectrum two megacycles wide. Thus all radio signals appearing within a two-megacycle portion of the input circuit of the radio will be heterodyned to within the first i-f spectrum of the receiver. The first i-f amplifier is variably tuned and tunes through the two-megacycle spectrum. The radio is designed to receive frequencies every 50 kc. Therefore, a crystal-controlled oscillator (half of V4) with appropriate signal outputs separated by 50 kc is used to heterodyne the variable i-f signal to a fixed i-f of 500 kc. The second crystal oscillator employs but 20 crystals; thus, it would appear that on a 50-kc basis, only one megacycle would be covered. However, each crystal is used twice, once with the variable i-f 500 kc below the crystal frequency and once with the variable i-f 500 kc above the crystal frequency so that the total of 40 channels is obtained over a two-megacycle portion of the tuning range. Refer to figure 4-2 for a block diagram that shows the crystal outputs and frequencies involved in one two-megacycle portion of the tuning range of the receiver. Figure 4-3 shows the complete complement of heterodyning signal frequencies and resulting signal frequencies.

4.1.3 RADIO-FREQUENCY AMPLIFIER, FIRST MIXER AND HIGH-FREQUENCY OSCILLATOR.

A type 5654 tube is used as the radio-frequency amplifier in Receiver 51X-2. A tuned antenna coil with the antenna connected to a tap is inductively coupled to the

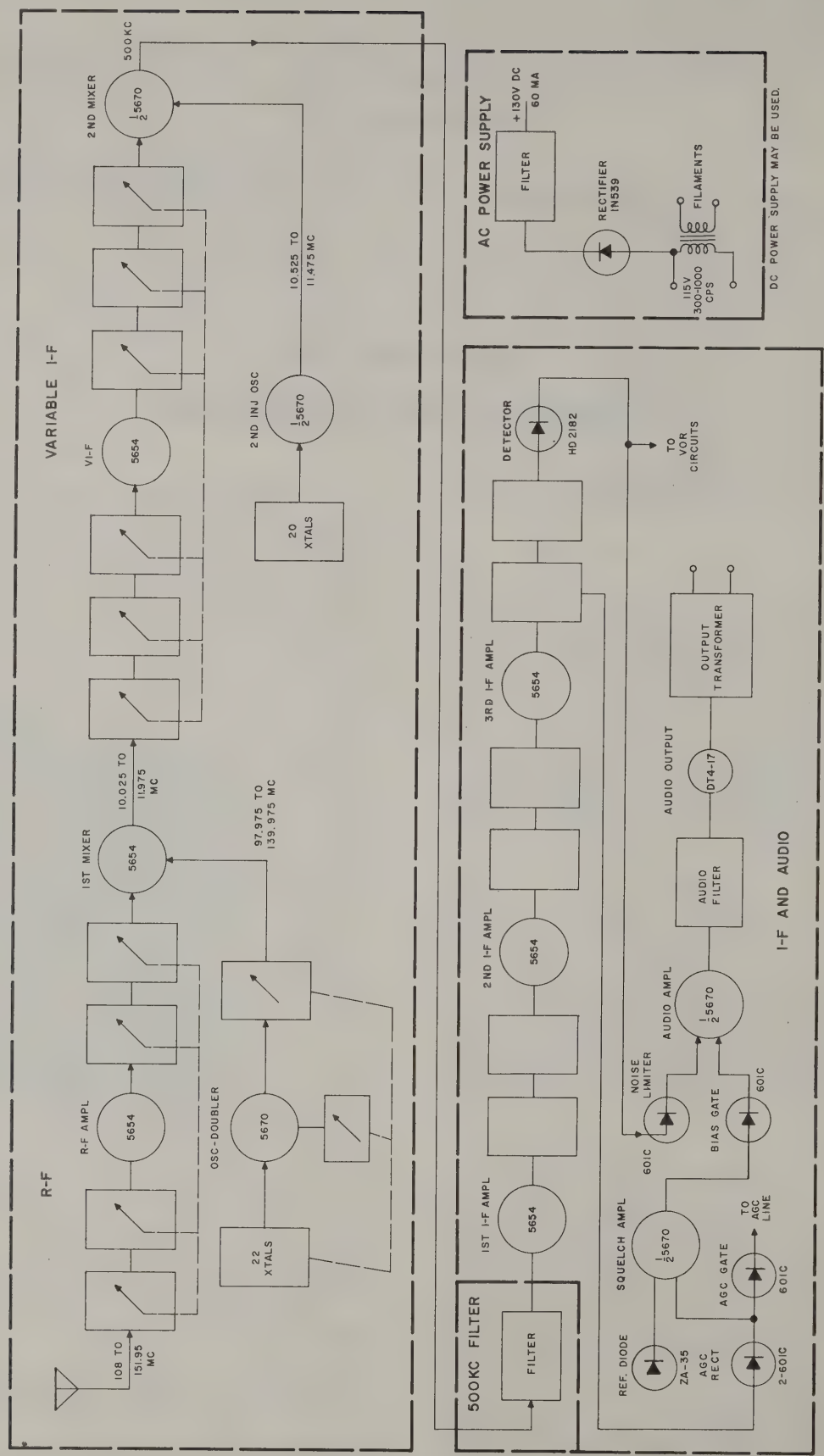

Figure 4-1. Navigation and Communications Receiver 51X-2, Block Diagram

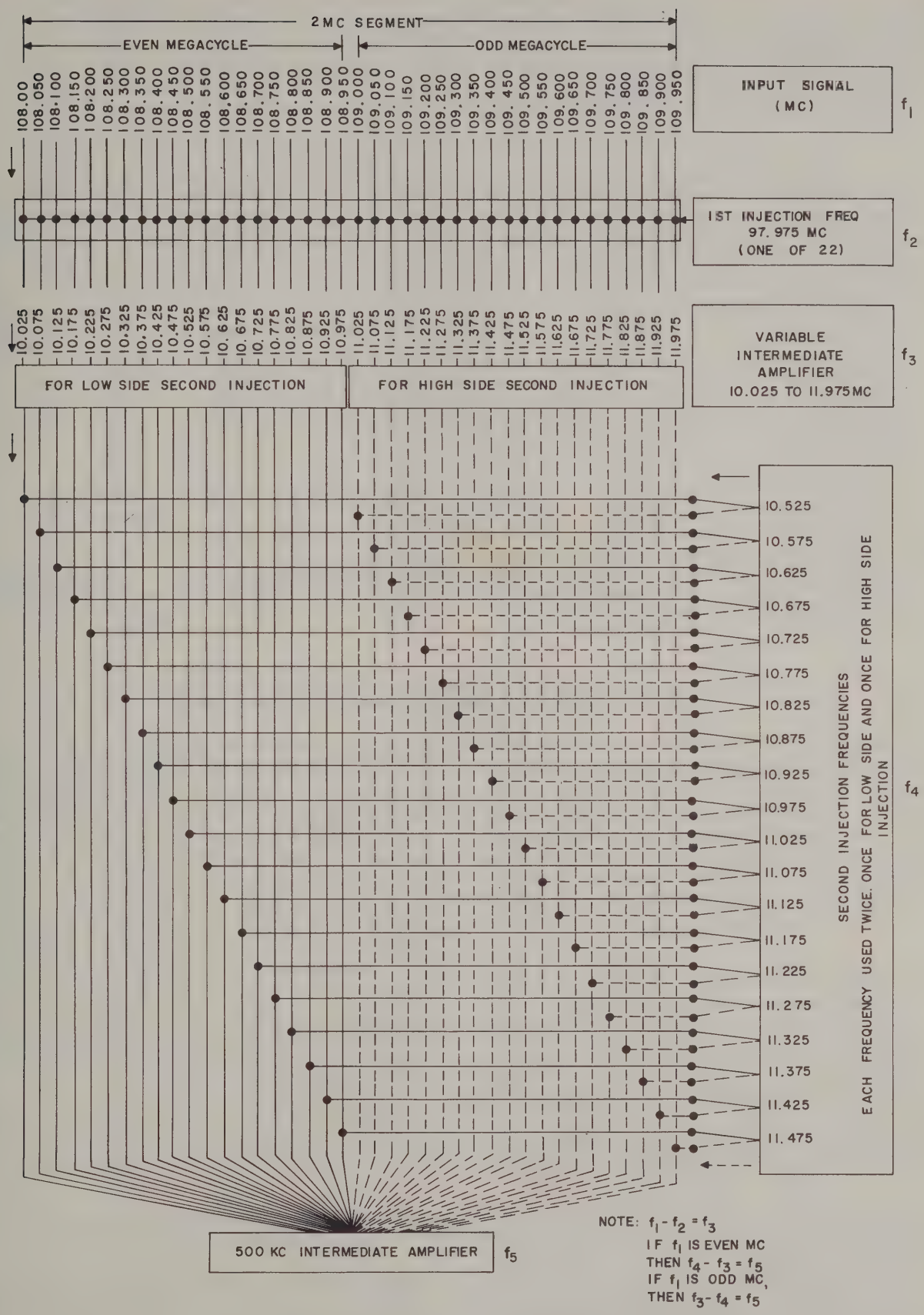

Figure 4-2. Circuit Frequencies Employed in the Reception of a 2-Mc Portion of the Reception Spectrum, Block Diagram

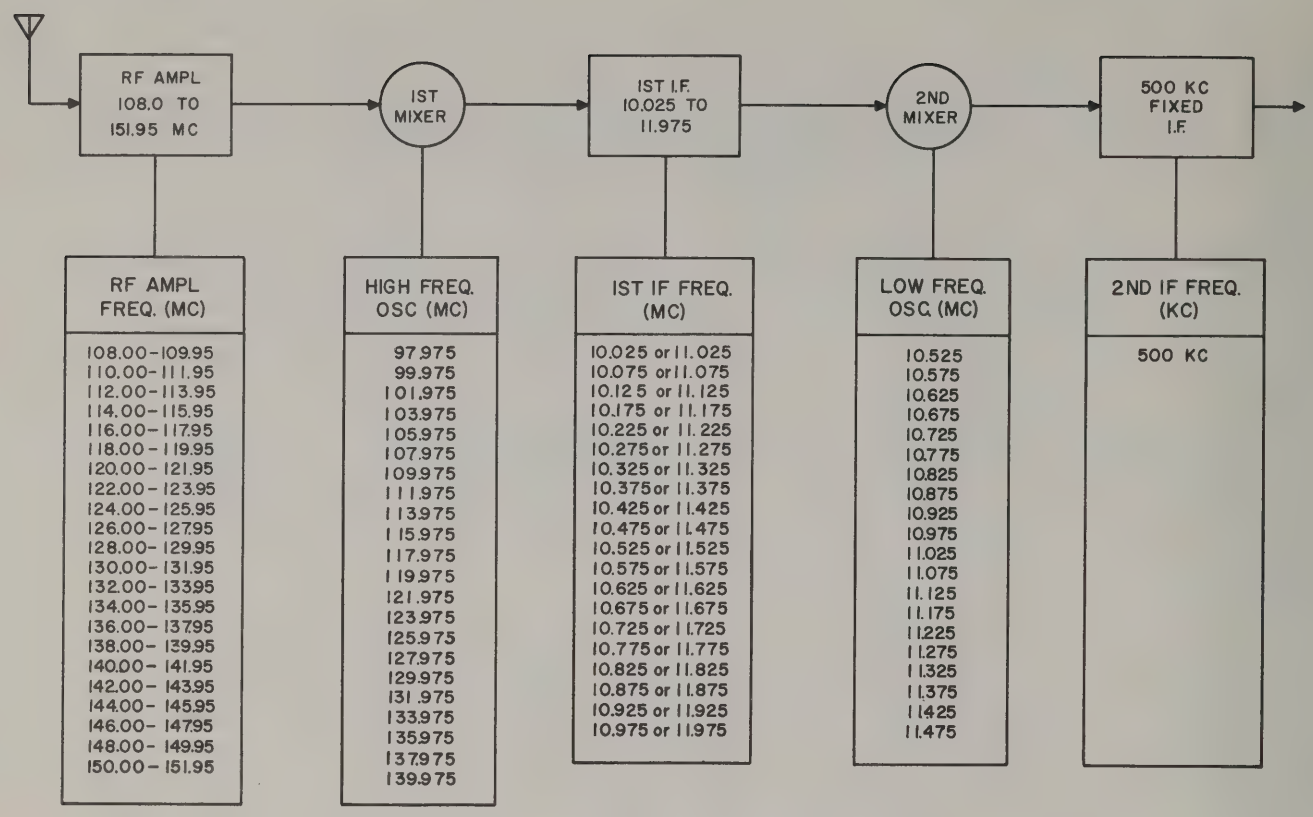

Figure 4-3. Over-all Frequency Scheme, Block Diagram

tuned grid of the radio-frequency amplifier. The plate coil of the r-f amplifier also is tuned and inductively coupled to the tuned grid coil of the first mixer. These four coils are tuned by a four-section variable tuning capacitor. The complete tuning range of the receiver is covered by the one set of coils. Automatic gain control is applied to the control grid of the r-f amplifier tube through R1. Resistor R4 is a parasitic suppressor in the screen circuit of the r-f amplifier tube.

The first mixer, V2, is a triode connected type 5654 tube. Cathode injection of the high-frequency oscillator signal is employed. Automatic gain control is not applied to this stage. The output of the first mixer is tuned to the variable intermediate frequency by a cam operated system of tuning slugs. The frequency range of the first mixer output is 10.025 to 11.975 mc. Three tuned circuits are used between the first mixer and the variable intermediate-frequency amplifier.

A heterodyning signal is supplied to the first mixer stage by a 5670 dual-triode tube, V5, in a crystal-controlled oscillator circuit. In this oscillator circuit, the crystal is connected between the cathodes of the dual triode. One section of the tube, pins 2, 3, and 4, is a cathode follower amplifier; the other section is a grounded-grid amplifier. Feed-back voltage is coupled from the plate of one section, which contains a tank circuit resonant at the crystal frequency, to the grid of the other section. The plate circuit of this section (pin 4) is tuned to double the crystal frequency. The voltage thus obtained is injected into the cathode of the first mixer. The crystals are fifth mode crystals and are used as filters between the cathodes of the tube. The phase shift through the entire oscillator loop is zero, and oscillation takes place at the desired mode of the crystal. The tuned circuit that selects the doubled frequency of the crystals consists of L37, C53, and Z1. Inductance L37 sets the initial inductance of the circuit, and capacitor C53 trims the circuit to the highest frequency. As each lower frequency channel is selected, Z1 adds additional inductance to the circuit. Printed circuit techniques are used in the construction of the switch and coils of Z1.

Inductance L36 tunes out the capacitive reactance of the crystal electrodes and connecting wires. Inductance L35 tunes out the reactance of the crystal holder capacity to ground.

4.1.4 VARIABLE I-F AMPLIFIER, SECOND MIXER, AND LOW-FREQUENCY OSCILLATOR.

A type 5654 tube is used in the variable intermediate amplifier stage. The variable i-f amplifier consists of six tuned circuits and a 5654 tube. The variable signal of 10.025 to 11.975 mc from V2, the first mixer, is fed through three tuned circuits to the grid of the variable i-f amplifier, V3. The output of the

variable i-f amplifier is fed through three tuned circuits to the second mixer, V4. The six tuned circuits are ganged and tuned by powdered iron slugs by means of connection to the 50-kc Autopositioner which is driven to the particular variable i-f frequency in use. Automatic gain control is shunt fed to the grid of V3, the variable i-f amplifier, through R9. The cathode of this tube is initially biased with cathode resistor R10 which is always in the circuit. See figure 4-4. When the receiver is tuned between 108.00 and 123.95 mc, only the cathode resistor is in the cathode circuit. When the receiver is tuned between 124.00 and 139.95, switch S7, rear, connects resistor R25 in series with the cathode resistor. When the receiver is tuned between 140.00 and 151.95, switch S7, rear, disconnects R25 and connects resistor R26 in series with the cathode resistor. This provides a more constant r-f gain over the receiver tuning range so that the squelch operates at a more constant level.

NOTE

Resistors R25 and R26 are selected in final test for optimum gain.

The second mixer utilizes one half of V4, a 5670 dual triode. The second half of the tube is used as the low-frequency oscillator.

The low-frequency oscillator is a crystal-controlled grid-plate type circuit in which the plate is at r-f ground and the cathode is high. Feedback is controlled by proper selection of the values of C39 and C40. The cathode circuit of the oscillator is common with the cathode circuit of the mixer, and cathode injection to the mixer takes place.

The low-frequency crystals are connected between the grid of the oscillator and ground by selector switch S1. Each crystal is used once for low side injection and once for high side injection in covering the two-megacycle range of the mixer grid. The sum (or difference) frequency signal then is fed to the 500-kc fixed i-f amplifier through the passive filter.

4.1.5 500-KC INTERMEDIATE AMPLIFIER.

The 500-kc fixed intermediate-frequency signal is fed from the plate circuit of the second mixer, V4, of the r-f and variable i-f module to a passive filter, FL1, module A5. This passive filter is adjusted at the factory to shape the selectivity curve of the receiver to the most ideal configuration for the type service in which the radio is used. The selectivity of the set is 40 kc minimum bandwidth at 6 db down and 74 kc maximum at 60 db down, most of which is furnished by the passive filter. The output of the passive filter is fed to the first 500-kc i-f stage, V1,

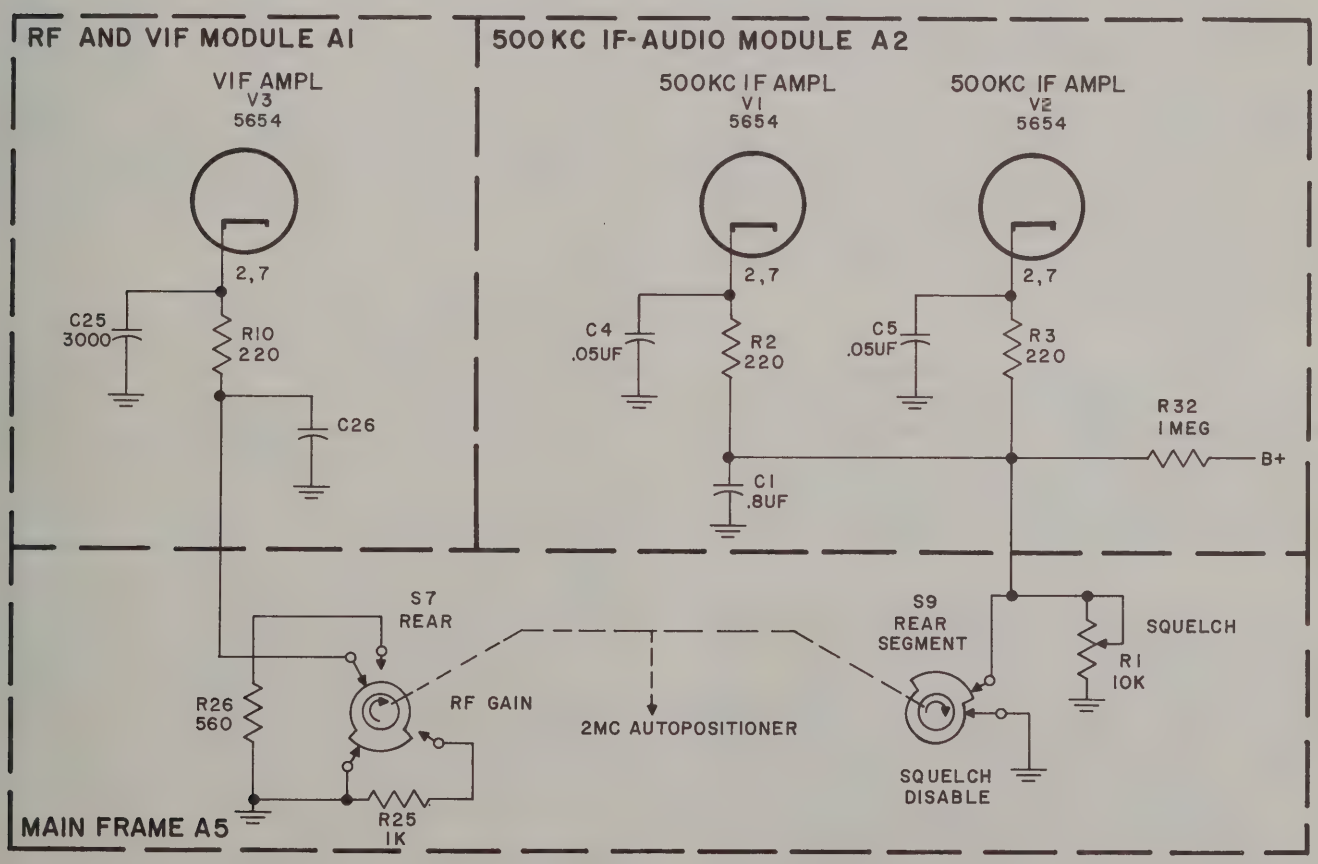

Figure 4-4. R-F Gain Control, Simplified

in the 500-kc i-f and audio module, A2. Three stages of type 5654 amplification are employed. The first two stages are supplied with agc, but the third stage is not. This arrangement is to obtain maximum amplification from the third stage with minimum distortion. The coupling transformers have slightly less than critical coupling and are equipped with loading resistors (except T3) to get a maximum flat-top passband. Transformer T3 is loaded on the primary side with the agc rectifier and on the secondary side with the detector. Very little selectivity is expected from these stages; however, they do supply some selectivity to the extreme lower edges of the skirt. Resistors R33 and R34 in the plate and screen of the first tube (V1) are parasitic suppressors. The cathode circuits of V1 and V2 normally are returned to ground through the SQUELCH control with which the gain of the i-f amplifier is controlled. When the receiver is operated in the frequency range 108.0 to 117.95 mc for VOR service, the SQUELCH control is short circuited to ground, and the i-f amplifiers operate at maximum sensitivity.

4.1.6 DETECTOR.

The detector, CR3, employs a type HD2152 semiconductor diode in a low impedance circuit. The signal voltage is obtained from a tap on the secondary of the last i-f transformer, T3. A low impedance circuit is employed here because of the requirements of the VOR output circuit which it also feeds. The diode load for the detector is a potentiometer, R12, that is used to adjust the signal output to the VOR. A filter consisting of C14 and L1 removes the 500-kc i-f from the VOR output line. The value of L1 is so chosen to be self-resonant near the 500-kc frequency. Therefore L1 presents a high impedance to the passage of 500-kc current through it. The communication audio output of the detector is coupled to the noise limiter through capacitor C17.

4.1.7 NOISE LIMITER.

Receiver 51X-2 employs a series type noise limiter utilizing a type T1601 semiconductor diode, CR4. In contrast to the detector circuit, which is a low impedance circuit, the noise limiter is a high impedance circuit. The circuit used is a self-adjusting type with components selected to make the limiter clip impulse type noise at approximately 80% modulation.

In operation, a positive voltage proportional to the carrier is developed across C18, and this voltage cannot change rapidly because C18 and R15 are relatively large. Diode CR4 acts as a conductor for the audio signal so long as the anode is positive with respect to its cathode. Positive noise peaks that exceed the maximum carrier-modulation level will drive the cathode positive instantaneously with respect to the anode, and during this instant, the diode does not conduct. The large time constant of R15 and C18 prevents any change in the reference voltage. The hole thus punched into the signal prevents the noise pulse from being reproduced but is of such short duration that the intelligibility of the signal is not affected seriously. Negative noise peaks are clipped automatically at the detector.

Because the reference voltage is obtained from the detector load, the reference voltage is adjusted up or down automatically in accordance with the strength of the received signal. Resistors R14 and R16 are audio voltage dividers. The noise limiter load, R18, is a screwdriver adjusted potentiometer used to set the value of audio input to the audio amplifier stages.

4.1.8 AUDIO AMPLIFIER STAGE.

One half of V4, a type 5670 dual triode, is used as the audio amplifier stage. Pins 2, 3, and 4 are the pins associated with the audio amplifier. The audio squelch is applied to this stage, refer to paragraph 4.1.11. Refer to figure 4-5. Capacitor C22 in series with R26 is the cathode bypass for the audio tube. The effectivity of C22 is reduced by resistor R26 during communication reception in the band 118.0 to 151.95 mc. The resistor is shorted out by switch S7 (front), and the capacitor is completely effective during VOR reception in the 108.0- to 118.0-mc band. Shorting the resistor raises the audio output about four decibels. This is done to compensate for different percentage modulations found in the communication and navigation bands. In the navigation bands, the modulation percentage is 30 percent. Whereas in the communication bands, the modulation percentage may run as high as 90 or 100 percent.

The plate load for the audio amplifier tube is an audio filter, FL1. The audio filter is instrumental in creating an over-all audio response that is within 6 db from 300 to 3750 cps and at least 20 db down at 120 and 5750 cps in the communication portion of the set.

4.1.9 AUDIO OUTPUT STAGE.

The audio output stage employs a type DT4-17 PNP transistor that is powered from the aircraft 27.5 v d-c supply. A common emitter circuit is used with audio feedback and base and emitter stabilization. The audio input to the base is a low impedance circuit; therefore, a large coupling capacitance is necessary. This capacitor, C23, is of 25-uf value. Resistor R30 provides audio feedback to improve distortion characteristics. Resistor R29 is the emitter stabilizing resistor, and R28 is the base stabilizing resistor. Without these stabilizing resistors, the transistor characteristics would have a tendency to change with severe changes in ambient temperature. Resistor R31 is a power source voltage dropping resistor, and capacitors C24 and C25 are audio bypass capacitors. For receiver disabling, the primary of the audio output transformer is short circuited by contacts 3 and 11 of receiver disabling relay K1.

4.1.10 AUTOMATIC GAIN CONTROL SYSTEM.

Two type TI601 semiconductor diodes are employed in a half-wave voltage doubler circuit to obtain agc

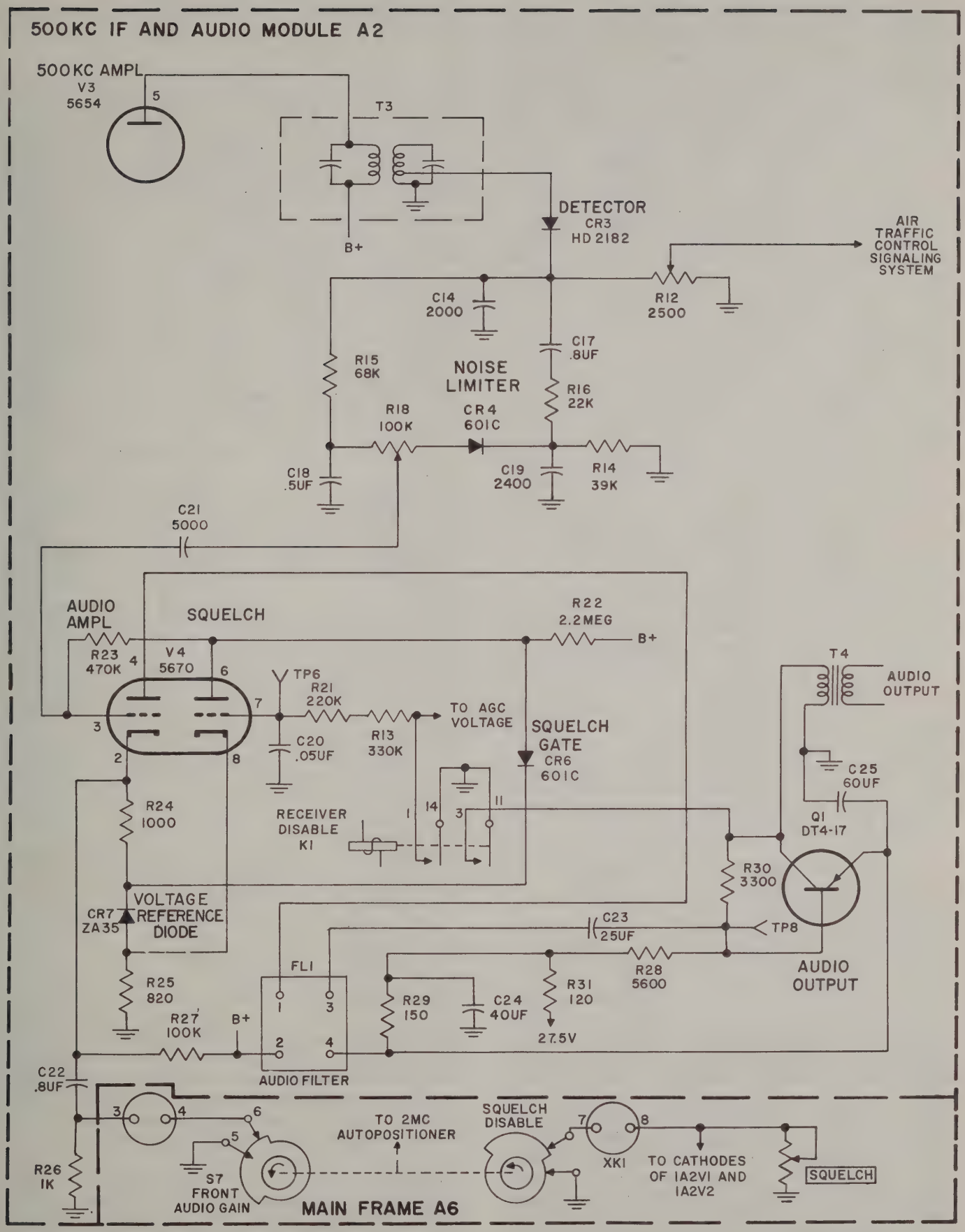

Figure 4-5. Audio and Squelch Circuits, Simplified

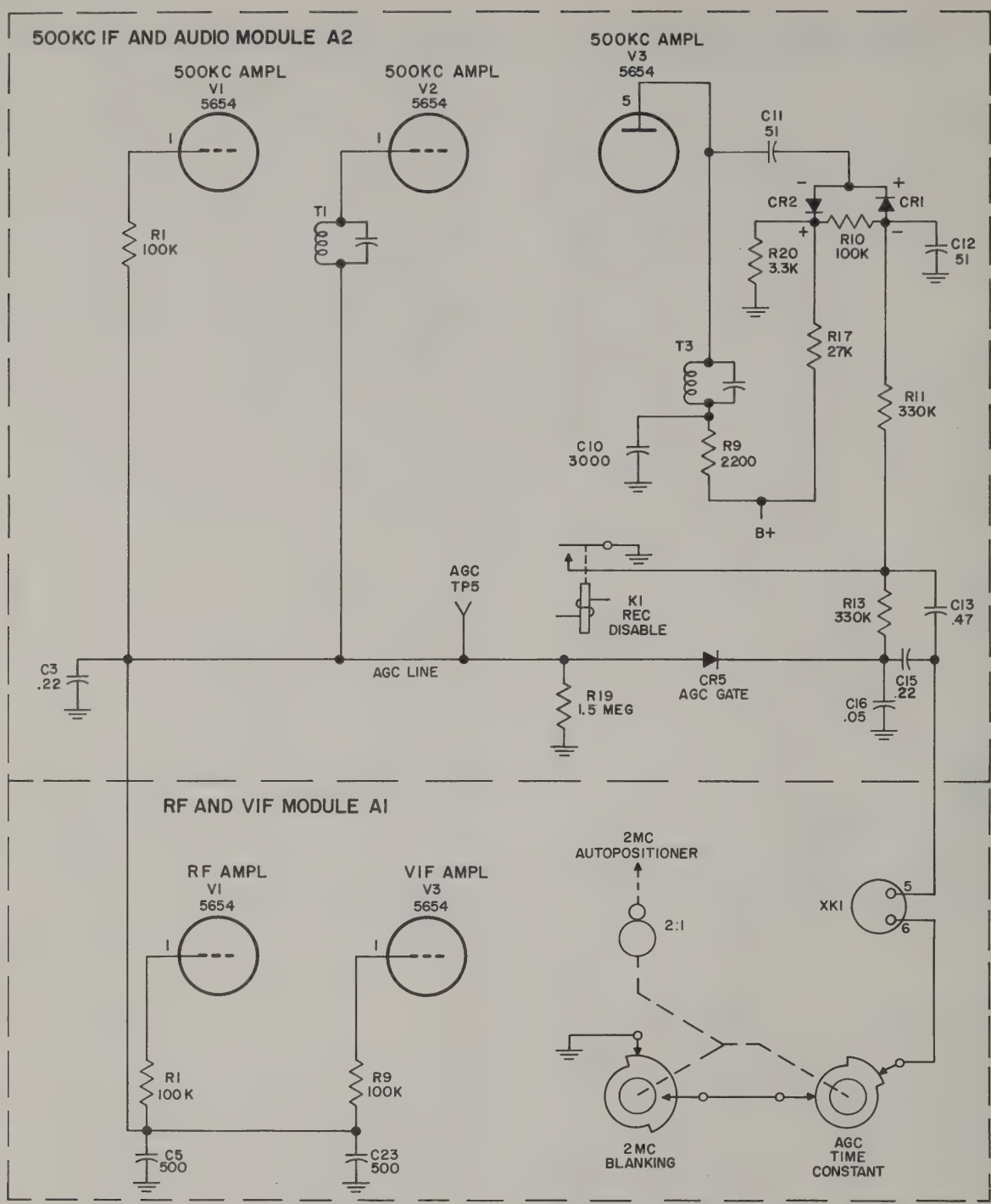

Figure 4-6. AGC Circuits, Simplified

voltage. See figure 4-6. The i-f voltage rectified by the agc rectifiers is taken from the plate circuit of the last 500-kc i-f amplifier through coupling capacitor C11. The diodes load resistor R10 is biased with plus 14 to 15 volts from the voltage divider, R17 and R20. The bias appears on both sides of the diodes so does not bias the diodes but does bias the agc gate diode, CR5, to a condition of nonconductivity under no signal conditions. Thus a very weak signal, even noise, produces agc voltage, but the agc voltage is prevented reaching the agc line until the agc voltage is great enough to overcome the positive bias that is placed on the agc gate diode. This system has several useful features, i.e., it maintains the set in a sensitive condition for weak signals without creating excessive distortion, it allows the use of the positive delay voltage to control the squelch tube grid, and it makes the agc voltage independent of the modulation.

In operation, one half of the 500-kc i-f voltage cycle is rectified by diode CR2 to charge capacitor C11. The next half of the i-f voltage cycle is added to the voltage on capacitor C11, and the sum of the voltages produces a current flow through CR1 and through the

diode load R10. The resulting voltage appearing across R10 is applied to the agc line through filter resistors R11 and R13.

Capacitors C13 and C15 are long time constant capacitors that are attached to the agc line to provide 180 degrees of phase shift to any 30-cps a-c that may feed back into the agc line in VOR service. If these capacitors were not used, the 30-cps a-c would feed back in the line with only enough phase displacement to cause error in VOR indications; therefore, capacitors C13 and C15 are electrically added to the line by operation of agc time constant switch S8, rear, when the receiver is being used in the VOR portion of its tuning range. When the receiver is being used for communication in the remainder of its tuning range, these capacitors are placed in series across filter resistor R13 and actually speed up the agc action. The 180 degrees of phase shift applied to the 30-cps a-c component in the agc line has no detrimental effect on the 30-cps modulation of the received signal except to reduce its amplitude slightly.

4.1.11 SQUELCH CIRCUIT.

See figure 4-5. The squelch circuit is associated with audio amplifier tube V4, pins 2, 3, and 4. In the absence of a signal in the receiver input, this audio amplifier stage is made inoperative to prevent annoying noise being reproduced in the speaker or headset.

The squelch circuit employs the second half of tube V4 which is used to shift the operating bias of the audio half of the tube to plate current cutoff in the absence of a signal and to return the operating bias to the proper level when there is a signal in the receiver r-f circuits.

Under conditions of no signal, the grid of the squelch tube (pin 7) is positive, and current flows through R22. This places the grid of the audio tube at a lower positive potential than its cathode which is maintained at a higher potential by means of R27 connected between the cathode and B plus and the voltage of CR7 together with resistors R24 and R25. At this time, CR6 is nonconductive. Rectifier CR7 maintains a constant d-c voltage across itself independent of the current through it. Since the grid of the audio tube is much more negative than the cathode, the tube is cut off or squelched. In the presence of a signal, the d-c voltage at the grid of the squelch tube goes toward zero and becomes negative. This starts to cut off the squelch tube, and the voltage at its plate and at the grid of the audio tube starts to rise. The audio tube starts to draw more cathode current. This extra current flowing through R25 causes the voltage on the cathode of the squelch tube to rise, further cutting off the squelch tube. The voltage at the plate of the squelch tube then rises until it exceeds the voltage at the junction of CR7 and R24. Then CR6 conducts and holds the voltage at the plate of the squelch tube (and thus the bias on the grid of the audio tube) constant for any further increase in the squelch grid voltage. The audio tube now functions normally as an audio amplifier.

Pressing the SQUELCH disable switch on the receiver front panel shorts out the SQUELCH control, R1, putting the receiver on maximum gain. The slight amount of agc voltage generated by noise makes the squelch tube inactive to allow the audio tube to pass audio. Thus any channel can be opened regardless of the SQUELCH control setting. On receivers after serial no. 186, this switch also disables the squelch tube by grounding out CR7.

The SQUELCH control R1 is a 10K-ohm variable resistor, connected in series with the cathodes of the first two 500-kc amplifier stages, with which the gain of the receiver can be adjusted. When the resistor is all out, the set is most sensitive, and a weaker signal will operate the squelch (in most cases, noise will operate the squelch); and when the resistor is all in, the set is less sensitive, and it takes a stronger signal to produce the required avc voltage necessary to remove the squelch. The squelch threshold is set at about 0 volt. This insures that no gain compression exists (which magnifies the squelch hysteresis) because of agc action while at the same time insuring that the audio rise between threshold and strong signal levels is not excessive.

4.1.12 FILAMENT CIRCUITS.

The filaments of the tubes used in this set are connected in a series-parallel arrangement so that they can be connected in parallel for energizing from 6.3 volts or they can be connected in two series strings each of which can be energized from 27.5 volts. See figure 4-7. When A-C Power Supply 516A-1 is plugged into the set, properly arranged jumpers in the 516A-1 connect the filament string for 6.3 volts and to the 6.3-volt filament transformer, T1, in the 516A-1. When D-C Power Supply 516B-3 is plugged into the set, similar jumpers in the 516B-3 connect the filament string for 25.2 volts and to the 27.5-volt source through a dropping resistor R3 in the main frame. The filaments are interlocked so that when the power supply is removed all filaments are disabled.

4.1.13 TYPE 516A-1 A-C POWER SUPPLY.

Refer to figure 8-1. The alternating current to energize the a-c supply is obtained from terminal 28 of power connector P1 of the main frame. One hundred fifteen volts of any frequency between 300 and 1000 cps can be used to energize Power Supply 516A-1. The receiver B+ power is obtained by rectifying the alternating current directly from the line without the use of a transformer. Rectifier CR1 is a silicon half-wave type. The rectifier is followed by a capacitor input RC filter employing two 120-ohm resistors and three 24-uf capacitors. Resistor R1 is a protective resistor employed to open up in the event a short circuit develops in the rectifier or filter capacitors.

The 6.3-volt a-c for energizing the receiver tube filaments is obtained from a step-down transformer in Power Supply 516A-1. The 6.3-v output is connected to the module plug which is wired to accept

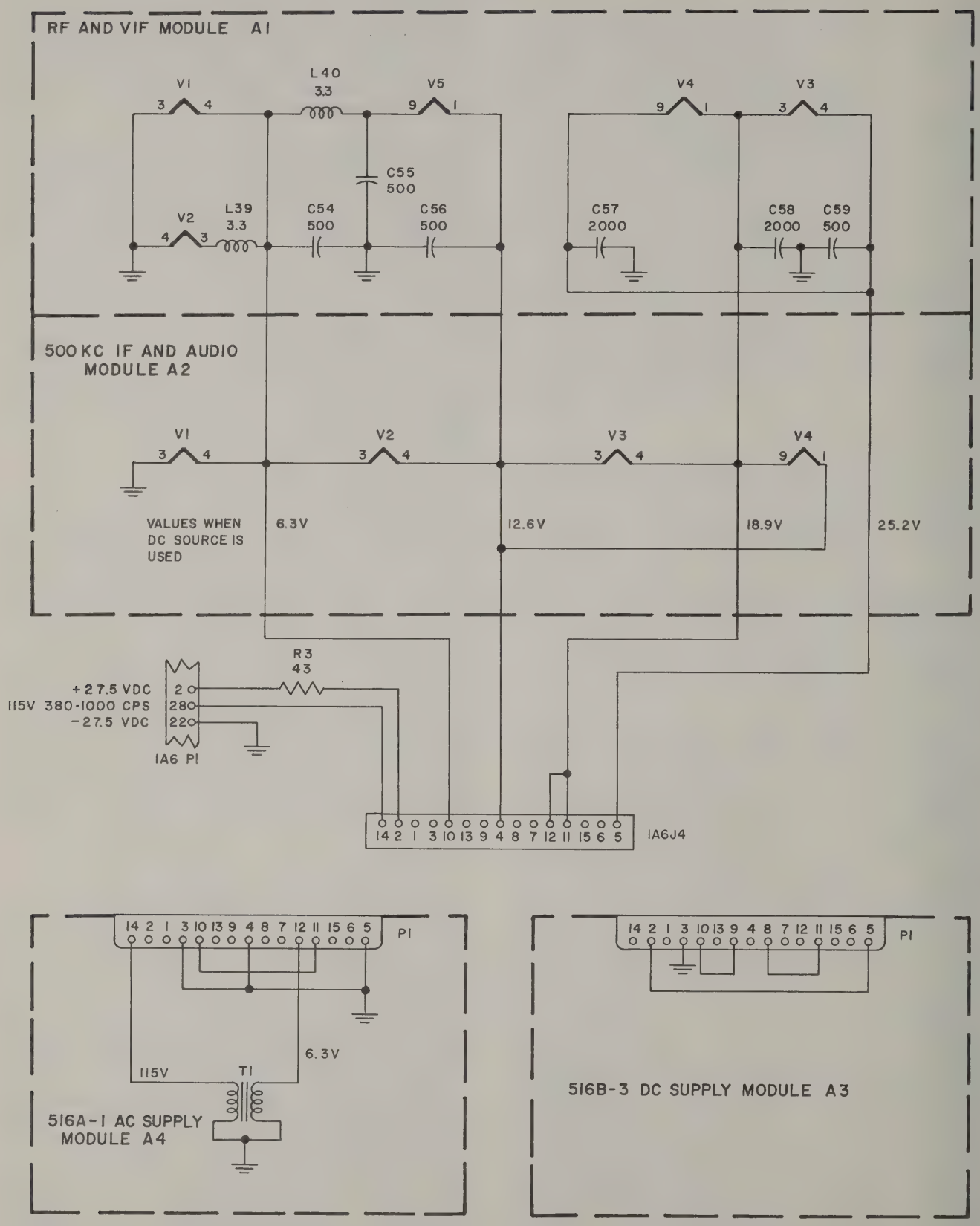

Figure 4-7. Filament Circuits, Simplified

both the a-c supply and a d-c supply. Jumpers in the power supply plug P1 feed the filament voltage out to the tube filaments which, in this case, are all connected in parallel for the 6.3-v value. When the d-c power supply is used, the jumpers in that unit connect the filaments in a series-parallel arrangement so that 27.5 v d-c may be used for energizing the filaments.

4.1.14 TYPE 516B-3 D-C POWER SUPPLY.

Refer to figure 8-1. This power supply is capable of converting 27.5 volts d-c into 130 volts d-c for application to the plates and screens of the tubes used in the receiver. The circuit employed utilizes two transistors in a grounded collector push-pull power oscillator, driving a step-up power transformer. The output of the power transformer is rectified by a pair of silicon diodes in a full-wave rectifier. The direct current output of the rectifier is filtered by a resistor input RC filter. The connector plug of Power Supply 516B-3 is jumpered so that the receiver filaments are connected in a series-parallel circuit for excitation from 27.5 volts d-c. The filaments are interlocked so that when the module is removed all other filaments are disabled.

Without a protective device, the transistors Q1 and Q2 in the power supply would be subject to permanent damage from high voltage transients of the 27.5-volt line. These transients often reach peak values of 80 volts which will generally break down the transistor base material causing internal short circuits.

In Power Supply 516B-3, a protective circuit is used to open the supply line to the transistors for the duration of any high voltage transient that may occur on the line. Refer to figure 8-1. Transistor Q3 is a switching transistor that is connected in series with the supply line. This transistor is normally conducting and has very little voltage drop across it. Transistor Q4 and diode CR3 provide the means for cutting off the current through Q3. Resistor R3 provides a means of setting the operating bias of the reference diode, and thermistor RT1 compensates for temperature variations.

In operation, the series transistor, Q3, is normally conducting. Transistor Q4 is connected so that it is not conducting, its base being held at about 27.5 volts by RT1. When a transient in the line occurs, the transient is applied to the emitter of Q4 and to the voltage divider R3 and R6. Diode CR3 is a Zener diode that resists a current through it in the reverse direction until its cathode voltage gets about 4.5 volts more positive than its anode voltage. When the line voltage rises, the voltage across diode CR3 rises causing diode current and thus Q4 base current. Q4 turns on, and the current flowing through Q4 produces slight reverse bias on the base of Q3 thus interrupting the collector current flow through Q3. Resistor R7 is connected across the emitter and collector of Q3 passing enough current to prevent the full transient voltage from appearing across Q3. The value of R7 is chosen so that at the peak of the transient (approximately 80 volts), the value of line voltage reaching the power supply is about 27.5 volts. When the transient decays to about +30 volts, the emitter of Q4 will be at +30 volts, also, and the base current of Q4 will drop to zero because of insufficient CR3 voltage to maintain current. This condition turns Q4 off and allows the voltage on the base of Q3 to return to normal, thus restoring the circuit through Q3. Capacitor C2 eliminates a small spike at the beginning of the blanked region of the waveform and serves as part of the radiated-noise filter. Resistor R5 supplies forward bias to Q3 to allow it to conduct. The current through R5 is the base current for Q3 until the transient appears, then the current through R5 becomes the collector current of Q4.

4.1.15 POWER SUPPLY FILTERING.

Each type power supply is equipped with a self-contained ripple filter. Additional filtering is obtained by mounting two filter capacitors C1 and C2 on the main frame and connecting them to the power supplies. Capacitor C1B is connected internally to the power supplies by means of pin 7 of J4, and C2 is connected to the output of the power supplies at pin 1 of J4.

4.2 FREQUENCY SELECTING CIRCUITS.

4.2.1 ELECTRICAL DESCRIPTION, GENERAL.

The frequency selecting components consist of two crystal selector switches (one for megacycle selection and one for 50-kc selection), a variable capacitor to tune the radio-frequency circuits, and a slug rack to tune the variable intermediate-frequency stages. All these items must be driven mechanically to a certain predetermined position for each channel. A 27.5-v d-c nonreversing electric motor is employed to drive these frequency selecting elements. Two Collins Autopositioners are used to stop accurately the frequency selecting elements at the proper position. This position, at which the Autopositioners are made to stop, is selected at a remote control unit. The remote control circuit consists of two separate binary (wire saving) seeking circuits plus several other grounding circuits. One binary circuit is used for megacycle selection, and the other is used for 50-kc selection. Generally speaking, the additional grounding circuits are used for tuning range extension; these will be explained in detail later.

4.2.1.1 AUTOPOSITIONER SYSTEM BASIC ELEMENTS. An Autopositioner is a motor driven rotary positioning mechanism providing automatic selection of any one of a given number of positions, each position being a fixed function of the switch combinations of the system. The basic elements of the Autopositioner, as shown in figure 4-8, consist of a motor and its gear reduction train, a slip clutch driving a rotary shaft to which is fastened a notched

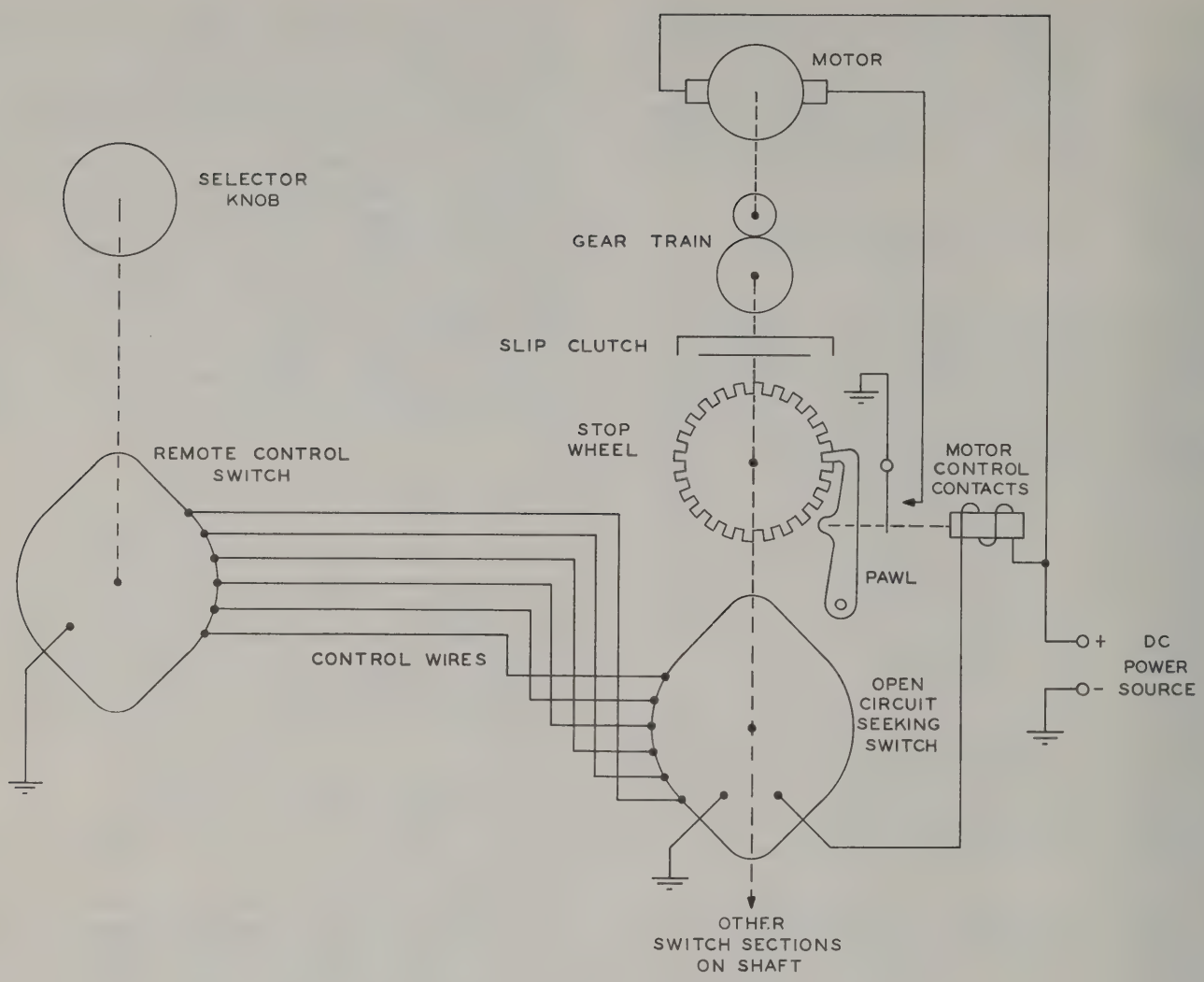

Figure 4-8. Autopositioner Basic Elements

stop wheel, a pawl which engages the notch of the stop wheel, and a relay which actuates the pawl and also operates a set of electrical contacts to start and stop the motor. Associated with each Autopositioner is an electrical control system consisting of a remotely located control switch and an electrically similar seeking switch that is driven by the Autopositioner shaft. This control system is of the open circuit seeking type, designed so that whenever the control switch and seeking switch are not set to the same electrical position, the Autopositioner unit is energized and drives its shaft (and the tuning elements to which it is coupled) to the proper position to restore the symmetry of the control system.

4.2.1.2 AUTOPOSITIONER CONTROL SYSTEM. To provide a positive control system for the Autopositioner with a minimum number of control wires, a binary control system employing the control wires in various combinations is used. This system is most readily explained by considering a system composed of single-pole double-throw switches as shown in figure 4-9. Note that when the switches are set

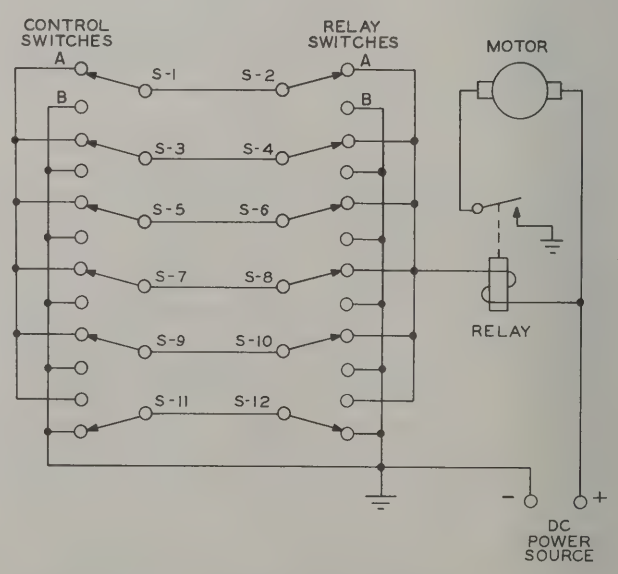

Figure 4-9. Autopositioner Function Diagram

symmetrically (S1 in the same position as S2, etc., as shown) there is no current path from the relay coil to ground, and the relay and motor remain de-energized. If, however, any of the control switches are set to a position opposite that of a corresponding seeking switch, a path to ground will be closed, energizing the relay and motor until the seeking switches are positioned again in a symmetrical arrangement with the control switches, which will again open the relay circuit.

The total number of different combinations of switch positions in such a system is 2^n, where n is the number of control wires used. In the six-wire system shown, 2^6 or 64 different combinations exist. However, one particular combination is not usable in this application. As can be seen in figure 4-9, if all the seeking switches are set to the B position, there can be no path from the relay coil to ground no matter how remote switches are set, and the system is dead. Hence, the maximum number of usable combinations in such a system is 2^n-1. Thus, a three-wire system can control 7 positions, four-wire 15 positions, and five-wire 31 positions.

4.2.1.3 CYCLE OF OPERATION.

a. The system is at rest with the control and seeking switches in corresponding positions (open circuit), relay in the de-energized position, pawl engaging a stop-wheel notch, and the motor not energized.
b. The operator changes the setting of the remote control selector switch.
c. The control system energizes the relay, lifting the pawl out of the stop-wheel notch and closing the motor control contacts.
d. The motor starts, driving the Autopositioner shaft and the rotor of the seeking switch.
e. The seeking switch reaches the point corresponding to the new position of the remote switch, opening the relay circuit, permitting the pawl to drop into the corresponding stop-wheel notch to stop shaft rotation.
f. The motor control contacts open, and the motor coasts to a stop, dissipating its kinetic energy in the slip clutch.

The seeking switch of the control circuit is adjusted to open the relay circuit before the stop wheel reaches the point where the pawl engages the proper notch. The relay contacts controlling the motor are adjusted so that they do not open until the pawl drops into the notch.

The slip clutch between the motor and Autopositioner not only absorbs the energy of the motor as it coasts to a stop but also permits the same motor to drive more than one Autopositioner, either simultaneously or independently.

4.2.2 51X-2 AUTOPOSITIONER SYSTEM.

The frequency selection method employed in Receiver 51X-2 is much the same as that discussed in the preceding paragraphs. The following paragraphs contain specific information concerning the 51X-2 Autopositioners.

4.2.2.1 MEGACYCLE SELECTION. The megacycle Autopositioner is composed of motor B1 which is common to both Autopositioners, seeking switches S9, and the front section of S8. Switch S9 is electrically symmetrical to switch S1001 in Control Unit 614G-1. Switch S8 is connected to the coil of the megacycle Autopositioner to permit the Autopositioner to rotate through the portion of the tuning cycle represented by the back of the tuning capacitor plates. Figure 4-10 is a schematic diagram of Control Unit 614G-1 connected to the receiver channeling circuits.

Switches S9 front and S9 rear are 24-position switches, two positions of which are unused. While the megacycle selector switches S1001, front and rear, are electrically symmetrical with S9, they must be moved two steps (one even megacycle and one odd megacycle) before altering the electrical information furnished S9. For example, the position of switch S1001 as shown in figure 4-10 and its position after rotating one stop clockwise is electrically the same. Odd- or even-megacycle tuning is determined by the action of S6 driven by the 50-kc Autopositioner through a 2-to-1 step-up gear from information furnished by S1002, front and rear, in the control unit.

Refer to figure 4-10. Notice that in this illustration, the megacycle seeking switches S9 are positioned for 108.0 mc, but the MEGACYCLE selecting switches in the control unit are set at 118.0 mc. As stated above, when the seeking switches and the control switches are set at dissimilar positions, a ground connection is furnished to the Autopositioner relay coil which results in the tuning motor being energized. This ground is furnished by clips 9 and 6 of switch S1001, front, via the D wire to clips 3 and 7 of S9, rear. The motor will continue to drive the megacycle Autopositioner until S9 is electrically similar to S1001 at which time an open circuit will appear, the relay coil of the Autopositioner will be de-energized, and the pawl will fall onto the notched wheel. The motor will continue to run, however, by virtue of contacts 3 and 4 of the Autopositioner which are held shut by the pawl. The pawl will fall into the first notch of the notched wheel to come along, and contacts 3 and 4 will open, and the megacycle Autopositioner will shut off. (If the 50-kc Autopositioner has not found its position at this time, the motor will continue to run, and the two-megacycle Autopositioner clutch will slip.) The seeking switches are synchronized with the notched wheel but are timed to open slightly ahead of the appearance of the associated notch. All tuning elements are synchronized carefully with the notches of the wheel; therefore, precision positioning is obtained. The two-megacycle Autopositioner selects frequencies of even megacycle in two megacycle steps, only. The selection of the odd megacycle is done by the variable frequency i-f amplifier and the low-frequency oscillator which are positioned by the 50-kc

Autopositioner. Figure 4-11 shows the wires and switching involved in the two-megacycle seeking system.

In selecting an odd megacycle, the remote control MEGACYCLE switch is set to the odd-megacycle frequency, for instance 109.0, but the electrical connections, insofar as switches S1001 are concerned, are the same as for 108.0 mc so the megacycle Autopositioner will set up on 108.0 mc as described above. Switch S1002, however, has changed configuration and applies a ground to the J wire which, through clip 19 of S6, energizes the 50-kc Autopositioner. The Autopositioner drives the odd-even megacycle switch, S6, until the connection at clip 19 of S6 is broken. The 50-kc Autopositioner then proceeds to the frequency that is set up on the 50-kc dial, in this case 000, and stops. The odd-even selector switch, S6, is driven from the 50-kc shaft through a 2-to-1 reduction gear. While switch S6 was making the 1/2 revolution necessary to break the contact at clip 19, the seeking switch, S4, was making a complete revolution, and the low-frequency oscillator crystal selecting switch was making one complete revolution and selecting the same crystal (because of 2-to-1 step-up gear). Also, during the half revolution of S6, the variable i-f cam made 1/2 revolution, but because this is a 360-degree cam, the tuning slug rack was moved only approximately through 1/2 of its range. The full range of the slug rack is 2 mc; therefore, the variable i-f is set to tune 11.025 mc which is the difference intermediate frequency produced when a 109.0-mc signal beats against the 97.975-mc high-frequency oscillator signal (the same signal used for 108.0 mc). Beating the 11.025-mc signal against the 10.525-mc low-frequency oscillator signal produces the required 500-kc fixed intermediate frequency.

The tuning motor, B1, always turns in the same direction so if a frequency lower than the one previously set up is selected, the megacycle Autopositioner merely moves to the new frequency and stops; but if a higher frequency is chosen, the megacycle Autopositioner runs through almost a complete cycle before it sets up on the new frequency. A blanking switch, S8, is attached to the two-megacycle shaft through a 2-to-1 reduction gear to get the megacycle Autopositioner rotated through the portion of arc represented by the undesirable sector of the tuning capacitor rotor plates.

There is a limit to the number of wires that may be used to keep the system compatible with previous equipments used by the airlines, and because of the numerous additional channels covered by Receiver 51X-2, a range extending means is employed utilizing an additional wire. This wire is designated the "N" wire and is grounded at all frequencies below 135.95 mc at the control unit. Refer to figure 4-11. Switch S9, front segment, is used in much the same manner as the two-megacycle blanking switch, S8, to permit the Autopositioner to rotate through the arc of rotation that is represented by the frequency range 108.0 to 135.95 mc whenever the range extension switch in the control unit grounds the N wire. After the tab on S9, front segment, clears the 108.0-135.95 mc of rotation, the Autopositioner is free to set up on the open circuit represented by the frequency shown on the control head. Some of the wire combinations used below 135.95 mc are again used for frequencies above 135.95 mc but with the addition of the N wire to the combinations. As soon as the tab of S9, front segment, clears clip 7, clip 7 can no longer energize the Autopositioner coil, and the N wire is grounded by clip 21 and later by clip 17 to give the seeking circuit another multiplier with which to extend the rotation of the tuning elements.

4.2.2.2 50-KC SELECTION. The 50-kc Autopositioner is controlled in much the same manner as the two-megacycle Autopositioner described in paragraph 4.2.2.1. Refer to figure 4-10. The receiver switches are set to 108.00 mc, but the control unit switches are set to 118.00 mc; therefore, there is no ground connection made to the 50-kc Autopositioner coil by seeking switch S4 or the remote control kilocycle selecting switch, S1003. Thus the Autopositioner is de-energized. The remote control kilocycle selecting switch, S1003, is similar to S1001 in that its electrical configuration is the same for two positions of the switch, i.e., for any 100-kc segment, the electrical configuration is the same for the even 50-kc setting as it is for the odd 50-kc setting even though the switch rotor is advanced one position. This is also true of the seeking switch, S4, in the receiver. To make the 50-kc Autopositioner choose between the even or odd 50-kc positions, a section is added to the 50-kc seeking switch (S4, front segment) that works in conjunction with switch section S1004 in the control unit to place a ground on the Autopositioner coil. This energizes the Autopositioner long enough to permit it to rotate the desired 50-kc position. If the action is from a low frequency to a higher frequency, the Autopositioner merely moves to the new channel. If the action is from a high frequency to a lower frequency, the Autopositioner moves the switches through the remaining high-frequency positions and through the necessary low-frequency positions required to arrive at the correct channel. This is because the motor is nonreversing. Figure 4-12 shows the wires and switching involved in the 50-kc seeking system.

Assume the system is set up on 108.0 mc. The tuning capacitor is positioned to tune 108.0 mc, the high-frequency crystal selector switch has selected the crystal that produces a 97.975-mc heterodyning signal, the variable i-f is tuned to 10.025 mc, and the low-frequency oscillator switch, S1, has selected the 10.525-mc crystal. High side injection is used, and a fixed i-f frequency of 500 kc is produced. Now, if the MEGACYCLE selector switch S1001 at the control unit is turned to the 109.0-mc position, the following will happen: the MEGACYCLE switch S1001 at the control unit, while being set to the next higher megacycle position, does not

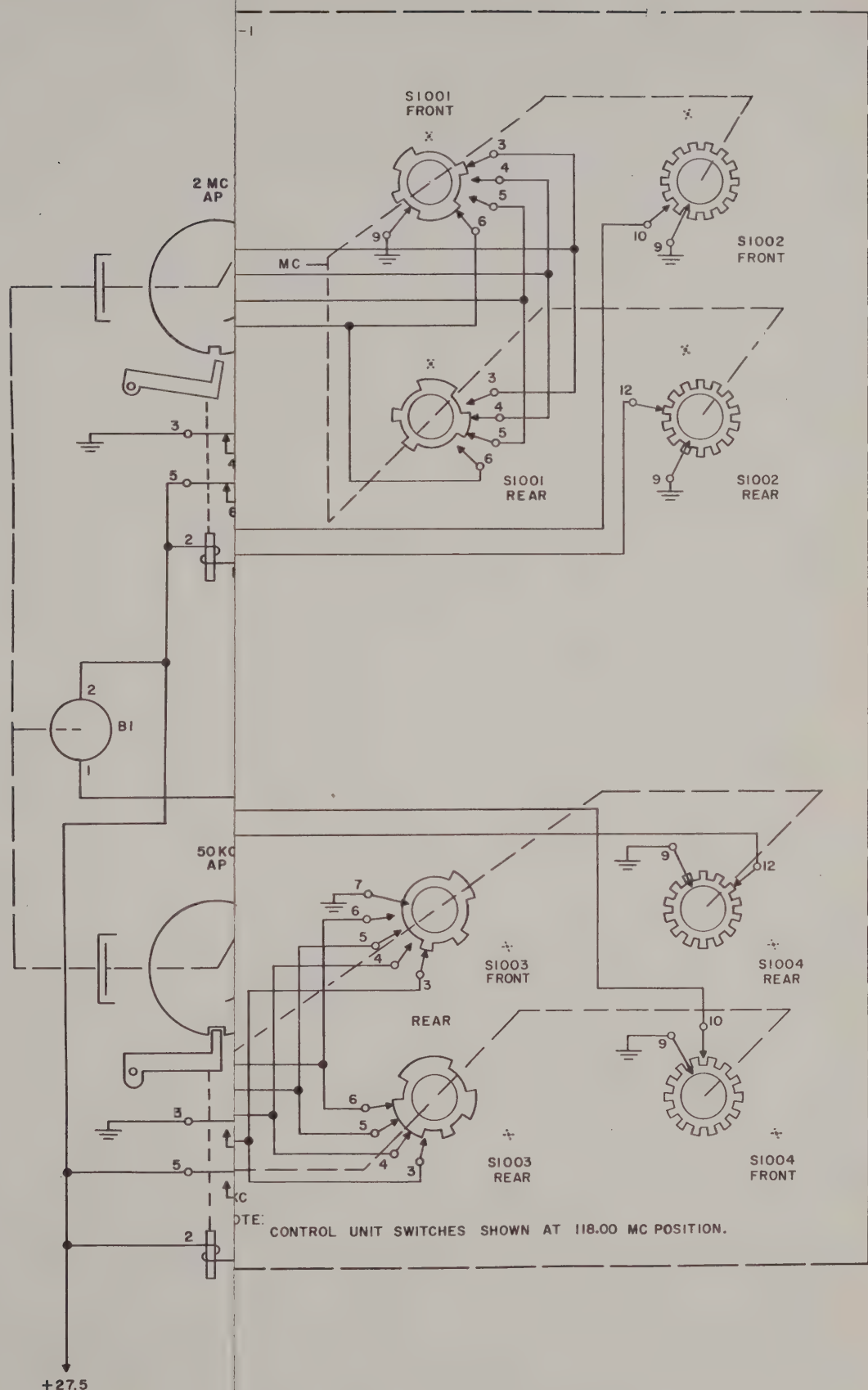

Figure 4-10. Autopositioner Electrical Circuits, Simplified

Autopositioner. Figure 4-11 shows the wires and switching involved in the two-megacycle seeking system.

In selecting an odd megacycle, the remote control MEGACYCLE switch is set to the odd-megacycle frequency, for instance 109.0, but the electrical connections, insofar as switches S1001 are concerned, are the same as for 108.0 mc so the megacycle Autopositioner will set up on 108.0 mc as described above. Switch S1002, however, has changed configuration and applies a ground to the J wire which, through clip 19 of S6, energizes the 50-kc Autopositioner. The Autopositioner drives the odd-even megacycle switch, S6, until the connection at clip 19 of S6 is broken. The 50-kc Autopositioner then proceeds to the frequency that is set up on the 50-kc dial, in this case 000, and stops. The odd-even selector switch, S6, is driven from the 50-kc shaft through a 2-to-1 reduction gear. While switch S6 was making the 1/2 revolution necessary to break the contact at clip 19, the seeking switch, S4, was making a complete revolution, and the low-frequency oscillator crystal selecting switch was making one complete revolution and selecting the same crystal (because of 2-to-1 step-up gear). Also, during the half revolution of S6, the variable i-f cam made 1/2 revolution, but because this is a 360-degree cam, the tuning slug rack was moved only approximately through 1/2 of its range. The full range of the slug rack is 2 mc; therefore, the variable i-f is set to tune 11.025 mc which is the difference intermediate frequency produced when a 109.0-mc signal beats against the 97.975-mc high-frequency oscillator signal (the same signal used for 108.0 mc). Beating the 11.025-mc signal against the 10.525-mc low-frequency oscillator signal produces the required 500-kc fixed intermediate frequency.

The tuning motor, B1, always turns in the same direction so if a frequency lower than the one previously set up is selected, the megacycle Autopositioner merely moves to the new frequency and stops; but if a higher frequency is chosen, the megacycle Autopositioner runs through almost a complete cycle before it sets up on the new frequency. A blanking switch, S8, is attached to the two-megacycle shaft through a 2-to-1 reduction gear to get the megacycle Autopositioner rotated through the portion of arc represented by the undesirable sector of the tuning capacitor rotor plates.

There is a limit to the number of wires that may be used to keep the system compatible with previous equipments used by the airlines, and because of the numerous additional channels covered by Receiver 51X-2, a range extending means is employed utilizing an additional wire. This wire is designated the "N" wire and is grounded at all frequencies below 135.95 mc at the control unit. Refer to figure 4-11. Switch S9, front segment, is used in much the same manner as the two-megacycle blanking switch, S8, to permit the Autopositioner to rotate through the arc of rotation that is represented by the frequency range 108.0 to 135.95 mc whenever the range extension switch in the control unit grounds the N wire. After the tab on S9, front segment, clears the 108.0-135.95 mc of rotation, the Autopositioner is free to set up on the open circuit represented by the frequency shown on the control head. Some of the wire combinations used below 135.95 mc are again used for frequencies above 135.95 mc but with the addition of the N wire to the combinations. As soon as the tab of S9, front segment, clears clip 7, clip 7 can no longer energize the Autopositioner coil, and the N wire is grounded by clip 21 and later by clip 17 to give the seeking circuit another multiplier with which to extend the rotation of the tuning elements.

4.2.2.2 50-KC SELECTION. The 50-kc Autopositioner is controlled in much the same manner as the two-megacycle Autopositioner described in paragraph 4.2.2.1. Refer to figure 4-10. The receiver switches are set to 108.00 mc, but the control unit switches are set to 118.00 mc; therefore, there is no ground connection made to the 50-kc Autopositioner coil by seeking switch S4 or the remote control kilocycle selecting switch, S1003. Thus the Autopositioner is de-energized. The remote control kilocycle selecting switch, S1003, is similar to S1001 in that its electrical configuration is the same for two positions of the switch, i.e., for any 100-kc segment, the electrical configuration is the same for the even 50-kc setting as it is for the odd 50-kc setting even though the switch rotor is advanced one position. This is also true of the seeking switch, S4, in the receiver. To make the 50-kc Autopositioner choose between the even or odd 50-kc positions, a section is added to the 50-kc seeking switch (S4, front segment) that works in conjunction with switch section S1004 in the control unit to place a ground on the Autopositioner coil. This energizes the Autopositioner long enough to permit it to rotate the desired 50-kc position. If the action is from a low frequency to a higher frequency, the Autopositioner merely moves to the new channel. If the action is from a high frequency to a lower frequency, the Autopositioner moves the switches through the remaining high-frequency positions and through the necessary low-frequency positions required to arrive at the correct channel. This is because the motor is nonreversing. Figure 4-12 shows the wires and switching involved in the 50-kc seeking system.

Assume the system is set up on 108.0 mc. The tuning capacitor is positioned to tune 108.0 mc, the high-frequency crystal selector switch has selected the crystal that produces a 97.975-mc heterodyning signal, the variable i-f is tuned to 10.025 mc, and the low-frequency oscillator switch, S1, has selected the 10.525-mc crystal. High side injection is used, and a fixed i-f frequency of 500 kc is produced. Now, if the MEGACYCLE selector switch S1001 at the control unit is turned to the 109.0-mc position, the following will happen: the MEGACYCLE switch S1001 at the control unit, while being set to the next higher megacycle position, does not

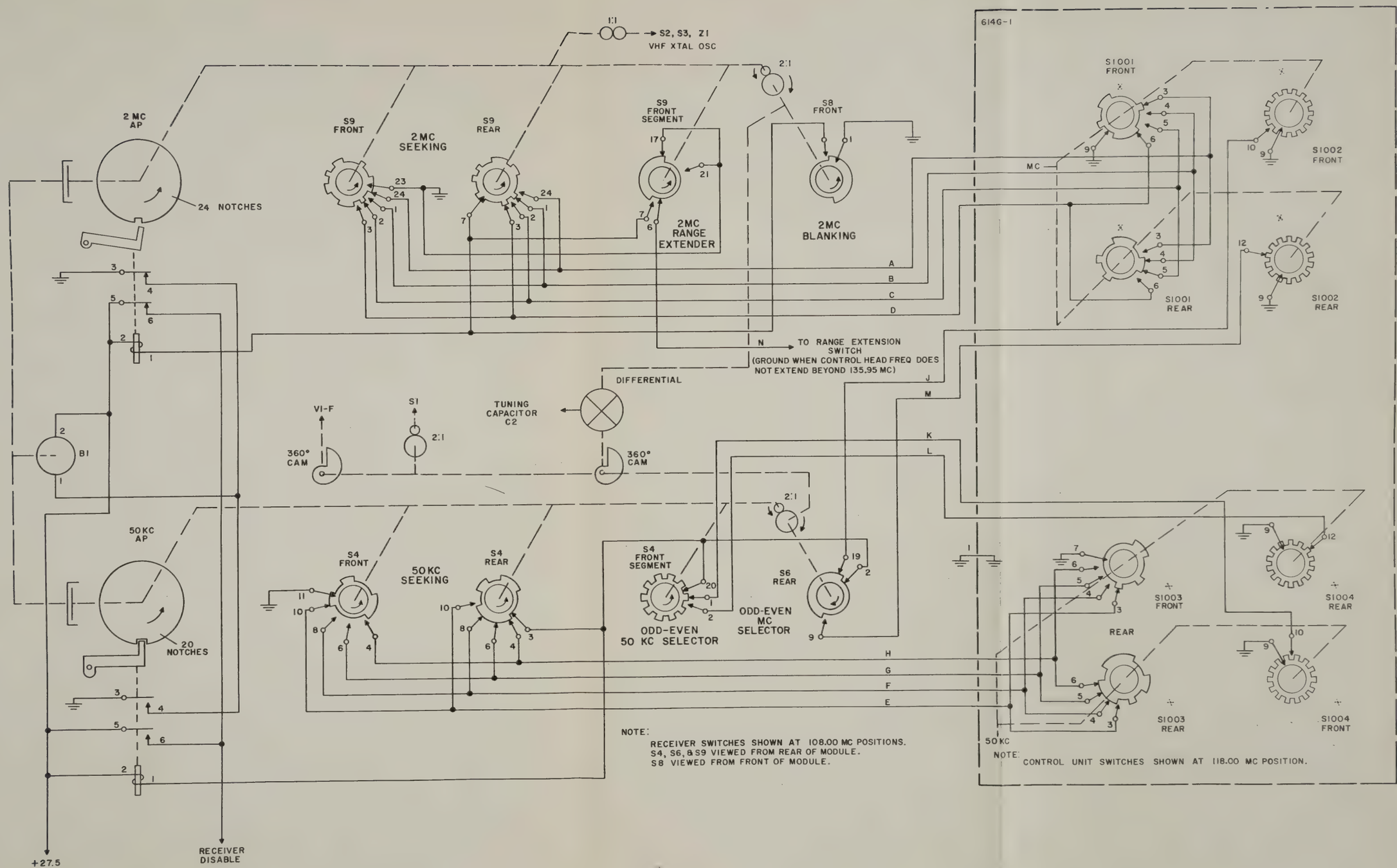

Figure 4-10. Autopositioner Electrical Circuits, Simplified

MEGACYCLE POSITION	S9				S6		S9
	A	B	C	D	J	M	N
108	X	O	X	O		X	X
109	X	O	X	O	X		X
110	X	X	O	X		X	X
111	X	X	O	X	X		X
112	X	X	X	O		X	X
113	X	X	X	O	X		X
114	O	X	X	X		X	X
115	O	X	X	X	X		X
116	O	O	X	X		X	X
117	O	O	X	X	X		X
118	X	O	O	X		X	X
119	X	O	O	X	X		X
120	O	X	O	O		X	X
121	O	X	O	O	X		X
122	O	O	X	O		X	X
123	O	O	X	O	X		X
124	O	O	O	X		X	X
125	O	O	O	X	X		X
126	X	O	O	O		X	X
127	X	O	O	O	X		X
128	X	X	O	O		X	X
129	X	X	O	O	X		X
130	O	X	X	O		X	X
131	O	X	X	O	X		X
132	X	O	X	X		X	X
133	X	O	X	X	X		X
134	O	X	O	X		X	X
135	O	X	O	X	X		X
136	X	O	X	O		X	O
137	X	O	X	O	X		O
138	X	X	O	X		X	O
139	X	X	O	X	X		O
140	O	X	X	O		X	O
141	O	X	X	O	X		O
142	O	O	X	X		X	O
143	O	O	X	X	X		O
144	X	O	O	X		X	O
145	X	O	O	X	X		O
146	X	X	O	O		X	O
147	X	X	O	O	X		O
148	X	X	X	O		X	O
149	X	X	X	O	X		O
150	O	X	X	X		X	O
151	O	X	X	X	X		O

THE WIRES OF THE 2-MC SWITCHES ARE GROUNDED OR CONNECTED AS SHOWN ABOVE WHEN THE INDICATED POSITIONS ARE SELECTED. AN X INDICATES THAT A WIRE IS CONNECTED TO GROUND. AN O INDICATES WIRES CONNECTED TOGETHER AND NOT GROUNDED.

THIS TABLE APPLIES TO THE REMOTE SELECTOR SWITCHES ONLY. AT THE RECEIVER, AN O INDICATES WIRES CONNECTED TOGETHER THAT GO TO THE 2-MC AP RELAY. ALSO, THE CODE OF THE J AND M WIRES IS INTERCHANGED TO INDICATE GROUNDING OF THE J WIRES AT EVEN-NUMBERED MC AND GROUNDING OF THE M WIRES AT ODD-NUMBERED MC.

Figure 4-11. 2-Mc Seeking Switch Wire Table

50 KILOCYCLE POSITION	S4					
	E	F	G	H	K	L
00	X	O	O	O		X
05	X	O	O	O	X	
10	O	X	O	O		X
15	O	X	O	O	X	
20	X	O	X	O		X
25	X	O	X	O	X	
30	O	X	O	X		X
35	O	X	O	X	X	
40	O	O	X	O		X
45	O	O	X	O	X	
50	X	O	O	X		X
55	X	O	O	X	X	
60	X	X	O	O		X
65	X	X	O	O	X	
70	O	X	X	O		X
75	O	X	X	O	X	
80	O	O	X	X		X
85	O	O	X	X	X	
90	O	O	O	X		X
95	O	O	O	X	X	

THE WIRES OF THE 50-KC SWITCHES ARE GROUNDED OR CONNECTED AS SHOWN WHEN THE INDICATED POSITIONS ARE SELECTED. AN X INDICATES THAT THE WIRE IS CONNECTED TO GROUND. AN O INDICATES WIRES CONNECTED TOGETHER AND NOT GROUNDED.

THIS TABLE APPLIES TO THE REMOTE SELECTOR SWITCHES ONLY. AT THE RECEIVER, AN O INDICATES WIRES CONNECTED TOGETHER THAT GO TO THE .05-KC AP RELAY. ALSO, THE CODE OF THE K AND L WIRES IS INTERCHANGED TO INDICATE GROUNDING OF THE K WIRE AT EVEN-NUMBERED .05 KC AND GROUNDING OF THE L WIRE AT ODD-NUMBERED .05 KC.

Figure 4-12. 50-Kc Seeking Switch Wire Table

change anything electrically because it is made to accommodate two channels so that the two-megacycle seeking switch does not move. Likewise, the high-frequency oscillator retains the same crystal. Switch section S1002, which is attached to the MEGACYCLE switch in the control unit which had been open circuited at the even megacycle position (108.0 mc), is now closed and places a ground on the J wire. See figure 4-10. This ground starts the 50-kc Autopositioner and moves the 50-kc seeking switches to a position where they are no longer open circuited, and the 50-kc Autopositioner starts a complete cycle. It continues to operate until it completes one revolution of the seeking switches, and it then finds its open circuit and stops. The odd-even megacycle selector switch, S6, rear, has advanced to where the J wire is open, and the M wire is closed at switch S6 but is open at switch S1002, rear, at the control unit. In the mean time, the low-frequency oscillator crystal selector switch has made one complete revolution and has selected the same crystal, but the variable i-f cam has been operated to the position where the variable i-f is tuned to 11.025 mc or to where low side injection using the same crystal that was used for 108.0 mc can be employed. Rotation of the 50-kc shaft operated the cam that drives the 50-kc input to the differential so that the tuning capacitor is advanced to the correct position for 109.0 mc.

Assume the system is set up on 109.0 mc, and it is desired to tune to 109.050 mc. The 50-kc dial of the control unit would have to be positioned at .050 which would move the 50-kc seeking switch, S1003, but would not change its circuitry because it also is constructed to present the same electrical configuration on the even and odd 50-kc positions in any 100-kc segment. Thus, the receiver seeking switches would not cause the Autopositioner to function, but switch S1004 in the control unit would place a ground on the K wire (see figure 4-10) which would cause the 50-kc Autopositioner coil to be energized. The Autopositioner would then turn the seeking switches and the 50-kc odd-even seeking switch, S4, front segment, until the K wire circuit is broken at S4, front segment. This movement of the 50-kc shaft is sufficient to rotate low-frequency oscillator crystal selector switch S1 to the next crystal at 10.575 mc. The variable i-f cam is advanced to a position equal to 50 kc, and the tuning capacitor, by means of the differential, is advanced to a position equal to 50 kc.

SECTION V

INSPECTION AND PREVENTIVE MAINTENANCE

5.1 GENERAL.

This section contains routine inspection and lubrication data and procedures that will aid in the evaluation of the performance of the equipment. Servicing procedures are given in section VI.

5.2 OPERATOR'S PERFORMANCE CHECK.

a. Tow the aircraft to a position on the field that is suitable for making reception checks, preferably in the clear and away from buildings, metal towers, and other aircraft.

b. Turn the equipment on, and allow a 15-minute warmup period.

c. Select several frequencies known to be active and which are known to be within the reception capabilities of the set with the SQUELCH set completely clockwise (at its most sensitive position).

d. Set the SQUELCH adjust control on the panel of the 51X-2 so that it just opens the receiver on the weakest of the signals found in step c.

e. Determine if the audio output of the receiver is sufficient for good reception. If inadequate, check any line amplifiers that may be in use. If they are functioning properly, remove the receiver from its mount, and advance AURAL LEVEL control R18. Replace the receiver into its mount, and repeat the audio output check. If the receiver responds to this adjustment properly, select several other stronger stations to see that the agc is functioning properly and that the audio does not overload.

f. Channel the set through all of the megacycle channels and then through all 20 of the 50-kc channels, and see that the receiver sets up on these channels. This may be done by comparing the dial indication of the receiver with the channel set up on the remote control dial. The channel setup time should not exceed 4-5 seconds.

g. Return the SQUELCH control to about midscale; then press the SQUELCH disable button, and check if the background noise appears as it should. Check the operation of any remote squelch controls.

h. If the receiver fails to produce satisfactory results, replace it with one known to be in good condition, and repeat the above tests to eliminate the possibility of troubles other than the receiver.

5.3 PERFORMANCE TEST OF RECEIVER 51X-2.

5.3.1 GENERAL.

The following tests assume a receiver that has been aligned properly and, so far as is known, in good condition. Mechanical and electrical alignment procedures are given in section VI of this book.

5.3.2 TEST EQUIPMENT REQUIRED.

The following test equipment, or equivalent, is required:

a. Shield room.
b. 28-v d-c power supply.

c. 115-v, 400-cps power supply.
d. Hewlett-Packard 608D Signal Generator.
e. Audio load and output meter.
f. Control panel.
g. Hewlett-Packard 330C Distortion Analyzer.
h. Hewlett-Packard 200AB Audio Oscillator.
i. Hewlett-Packard 410B VTVM.
j. D-c vtvm.
k. Oscilloscope.
l. A Collins Receiver 51J.
m. A-c wattmeter, 50 w.
n. D-c ammeter, 5 amp.
o. Hewlett-Packard 400C VTVM.

5.3.3 PRELIMINARY TESTS.

5.3.3.1 NONOPERATIONAL CHECK.

a. Measure the resistance from the following rear pins to ground with an ohmmeter. Resistances should be approximately as specified.

PIN NO.	RESISTANCE	
	D-C SUPPLY	A-C SUPPLY
2	12 ohms	2000 ohms
28	infinite	22 ohms
23	280 ohms	280 ohms
4	infinite	infinite
5	infinite	infinite

b. Measure the resistance from the + terminal of C2 of the main frame to ground. This resistance should be approximately 15K ohms.

5.3.3.2 OPERATIONAL CHECK.

a. Apply power to receiver, checking for dark or overly bright filaments. Note that a-c power requirement is about 25 watts, and d-c current (when using a-c supply) is less than 0.1 ampere except during channeling when it may rise to about 2.2 amperes. With d-c power supply, note that d-c current drain is about 1.1 amperes rising to approximately 3.3 amperes when channeling.

b. Check that receiver sets up properly on each megacycle channel and each 50-kc channel.

c. Check that top leads of capacitors C13 and C15 of the i-f and audio module are grounded from 108.0 mc to 117.95 mc.

d. Check that 27.5 v exists on pin 19 of P1 of the main frame from 118.0 to 151.95 mc.

5.3.4 TEST REQUIREMENTS.

5.3.4.1 SENSITIVITY.

a. Adjust the receiver frequency to 108.00 mc, and connect the Hewlett-Packard 608D Signal Generator to the receiver antenna input through a 6-db matching pad. Set SQUELCH control for maximum gain.

b. Set the signal generator output to 3 uv, and adjust the generator frequency for maximum agc voltage at TP5 on the i-f and audio module.

c. Adjust the signal generator for 30% modulation at 1000 cps.

d. Connect a 500-ohm audio load to the audio output terminals, and adjust the AURAL LEVEL control (R18) for 100-mw output.

e. Remove the 1000-cps modulation, and note the audio output level. Record the decibel drop in audio level as the (S+N)/N ratio.

f. Record the squelch threshold in microvolts.

g. Repeat steps a. through f. for each of the following frequencies: 109.0, 112.1, 115.2, 118.4, 121.45, 124.5, 127.55, 130.6, 134.65, 137.7*, 140.75, 143.8, 146.85, 149.9, and 151.95 mc. Limits: Not less than 6 db (S+N)/N ratio, squelch threshold 0 microvolt (opens on noise).

5.3.4.2 SELECTIVITY.

a. With the Hewlett-Packard 608D Signal Generator connected to the receiver antenna input, adjust the generator output to 127.5 mc and 2 uv, no modulation.

b. Set the receiver SQUELCH control for maximum sensitivity, and connect the vtvm to TP5 on the i-f and audio module.

c. Loosely couple Receiver 51J to the 500-kc output.

d. Adjust the signal generator frequency so as to obtain an i-f frequency of exactly 500 kc as indicated on the 51J using the second harmonic (1000 kc). Note this reference output level as read on the vtvm at TP5.

e. Adjust the signal generator output level to 4 uv (6 db), and adjust the generator frequency to either side of resonance until the reference vtvm indication noted in step d. is again obtained.

f. Measure the + and -6 db frequencies with the 51J.

g. Record the difference between the above frequencies as the total bandwidth. This should not be less than 40 kc.

h. Adjust the signal generator output level to 2K uv, and repeat steps e. through g. for the 60-db points. This should not be more than 77 kc.

5.3.4.3 AVC CHARACTERISTICS.

a. Adjust Hewlett-Packard 608D Signal Generator to 115.00 mc at 5 uv with 30% modulation at 1000 cps.

b. With the receiver set to 115.00 mc, adjust the signal generator frequency for maximum avc voltage at TP5 on the i-f and audio module.

c. Adjust the AURAL LEVEL control (R18) for 20 mw output for a zero reference.

d. Adjust the signal generator output to 100K and 400K microvolts, and record the decibel change in output for each input level using the output level of 20 mw as a reference. Decibel change should not be more than 4.0 db for 100K nor more than 8 db for 400K.

---

*Some sets are purchased with crystal complements that do not include reception frequencies higher than 135.95 mc.

5.3.4.4 SQUELCH PERFORMANCE.

a. Set receiver to 118.00 mc. Rotate receiver SQUELCH control to its extreme counterclockwise position. Tune the Hewlett-Packard 608D Signal Generator to 118.00 mc, and connect to receiver input. Increase generator output until squelch just opens. Record level at which squelch opens.

b. Decrease the signal generator output 20 db, and push the SQUELCH disable button. Note that the squelch opens.

c. Repeat step a. for each of the following frequencies: 120.30, 123.95, 124.30, 129.50, 134.70, 139.90, 140.90, 147.00, 151.95 mc. Limits: Minimum squelch opening point, not less than 25 uv with not more than 6 db variation between any two squelch opening levels. Gain control resistors R25 and R26 are chosen to balance the gain across the band.

d. Set receiver frequency and signal generator to 118.00 mc. Adjust signal generator output to three microvolts, and set the receiver SQUELCH control so that the squelch just opens.

e. Increase generator output; then slowly decrease output until squelch just closes. Record generator output at this point.

f. Slowly increase generator output, and record the generator output where the squelch just opens. This should not be more than three decibels open-to-close.

g. Increase modulation to 90%, and measure squelch opening point.

h. Decrease modulation to 10%, and measure squelch opening point. There should not be more than three decibels variation between steps g. and h.

i. Check that pin 25 of P1 is grounded from 108.0 to 117.95 mc.

5.3.4.5 ATC OUTPUT.

a. Set the receiver to 115.00 mc, and adjust the Hewlett-Packard 608D Signal Generator for 1000 uv output, 30% modulation at 1000 cps.

b. Check that the ATC/VOR/LOC potentiometer (R12) on the i-f and audio module is adjusted for 0.5-v output across a 100K-ohm load using a Hewlett-Packard 400C for measurement. Readjust the ATC/VOR/LOC potentiometer (R12) on the i-f and audio module, if necessary.

5.3.4.6 AUDIO RESPONSE.

a. Connect 500-ohm load to audio output terminals of receiver. Tune the Hewlett-Packard 608D Signal Generator and receiver to 118.00 mc.

b. Adjust the AURAL LEVEL control for 100-mw output while feeding in a 1000-uv, 1000-cps, 30 % modulated signal.

c. Measure the response at the following frequencies: 120, 300, 1000, 3750, and 5750 cps; then vary the modulation frequency to find the point of maximum output. Record this frequency and its level with respect to the reference level at 1000 cps. Limits: At least -20 db at 120 cps and 5750 cps; not more than 6 db variation between 300 and 3750 cps.

d. With the receiver and generator tuned to 115.00 mc, adjust audio power to 100 milliwatts with 1000-uv, 1000-cps, 30 % modulated signal. Tune receiver and generator to 118.00 mc, and measure the output power for a 1000-uv, 1000-cps, 30 % modulated signal. Leave AURAL LEVEL control as set in step b. The resulting power output should be not more than 50 mw.

NOTE

The 51X-2 is set at the factory for 100 mw output with a 1000-uv signal modulated 30% with a 1000-cps audio signal. This setting will give a power output of approximately 50 mw in the communication band. This power output may be too high for some installations. If it is, adjust the AURAL LEVEL control, R18, in the i-f and audio module to a level suitable for the particular installation.

5.3.4.7 AUDIO DISTORTION. Measure the distortion at the audio output at 1000 cps using 30% modulation and 90% modulation. Use a signal generator output of 1000 uv, and maintain 100 mw output for each condition. There should be not more than 7.5% distortion at 30% modulation nor more than 20% distortion at 90% modulation.

5.3.4.8 DISABLING CIRCUIT.

a. Connect variable source of d-c voltage to pin 23 of P1 of the main frame.

b. Starting from a low voltage, increase voltage until receiver becomes disabled. The voltage necessary for disabling the receiver should be not more 20 v.

5.3.4.9 SPURIOUS REJECTION.

a. Adjust the Hewlett-Packard 608D Signal Generator output to 2 uv at 108.00 mc, and set the receiver to 108.00 mc.

b. Connect the oscilloscope to the audio output and the vtvm to TP5 on the i-f and audio module.

c. Tune the signal generator for maximum avc voltage at TP5, and note this avc reference level.

d. Adjust the signal generator output to 200K uv with 1000 cps, 30% modulation, and search the frequency range 80 to 200 mc for spurious signals which will appear on the oscilloscope.

e. When a spurious is located, remove the 1000-cps modulation, and adjust the generator output to obtain the same avc reference level noted in step c.

CAUTION

Be certain that the spurious response is not due to a spurious output of the generator. With some experience, it is possible to distinguish these spurious responses from a true receiver spurious. When in doubt, check by using a different model of generator.

f. Repeat steps a. to e. for receiver frequencies of 127.50 mc and 151.95 mc. Take particular note of those frequencies which are removed from the dial

frequency by half the i-f frequency (250 kc) and i-f images. Limits: Not less than 80 db (20,000 uv).

5.3.4.10 LOW SUPPLY VOLTAGE OPERATION.

a. Turn off receiver for a sufficient time to allow filaments to cool.
b. If using d-c supply, adjust voltage to 22 volts, and turn on receiver. Note that a 10-uv, 1000-cps, 30 % modulated signal results in audio output. Operate channel selector, and note that Autopositioner sets up properly.
c. If using a-c supply, adjust voltage to 92 volts, and note that 10-uv signal is passed through receiver and that Autopositioner operates properly.

5.3.4.11 ALTERNATE POWER SUPPLY OPERATION.

a. Remove the power supply used in the previous tests, and substitute the alternate supply.
b. Measure sensitivity at 115.2 mc and 127.50 mc as in paragraph 5.3.4.1. The limits of the (S+N)/N ratio should be not less than 6 db.

5.3.4.12 GLIDE SLOPE RECEIVER POWER.

a. With power applied to the receiver, measure the d-c voltage from pin 27 of P1 to ground.
b. Check that the 27.5-v is obtained at each of the frequencies specified below and that the voltage is zero at all other frequencies: 108.1, 108.3, 108.5, 108.7, 108.9, 109.1, 109.3, 109.5, 109.7, 109.9, 110.1, 110.3, 110.5, 110.7, 110.9, 111.1, 111.3, 111.5, 111.7, 111.9 mc.

5.4 LUBRICATION.

The r-f module is the only module requiring lubrication. Some parts are lubricated for the life of the unit, and some parts must not be lubricated.

5.4.1 LUBRICANTS.

Use the following lubricants, or equivalents, where specified:

LUB.	COLLINS PART NO.	A/N NO.	TYPE
A	005 0116 00	AN-06	Oil
B	005 0010 00	--	Lubriplate No. 105 Fiske Bros.
C	005 0334 00	--	Lubricant - dry

5.4.2 PARTS NOT REQUIRING LUBRICATION.

Parts that do not require lubrication during the life of the unit are as follows:

a. Tuning motor, tuning capacitor, and bore of the clutch gears. These have been lubricated for the life of the unit.
b. All gear teeth.

CAUTION

The Autopositioner clutch working surfaces and the clutch gear teeth must not be lubricated and must be kept free of all foreign contaminants (grease, oil, dirt, etc.) at all times.

5.4.3 PARTS TO BE LUBRICATED.

PARTS LUBRICATED AT INTERVALS OF 10,000 TUNING CYCLES	LUBRICANT	QUANTITY
Working surfaces of the cams	C	Thin film
Tuning table guide slots	C	Thin film
Bores of gears that idle on shafts (except those mentioned in par. 5.4.2a.)	A	One drop
Porous bronze bearings	A	One drop
PARTS LUBRICATED AT INTERVALS OF 25,000 TUNING CYCLES		
S1 through S9	B	Thin film on rotor contact paths. Avoid excess.

NOTES

Access to lubrication points may be gained by the removal of covers; further disassembly is unnecessary.

If any item requiring lubrication is disassembled, it should be relubricated upon reassembly into the set.

SECTION VI
CORRECTIVE MAINTENANCE

6.1 MECHANICAL ALIGNMENT.

NOTE

Mechanical alignment is not required ordinarily unless r-f and variable i-f module is disassembled.

Refer to figure 6-1 for preliminary mechanical adjustment. The final mechanical alignment is done as follows after first connecting the r-f and variable i-f module to the remainder of the receiver using a two-foot patch cable.

a. Check that preliminary module synchronization has been made in accordance with figure 6-1.

b. Connect r-f unit to receiver, and apply power. Cycle each Autopositioner in turn, and note that the front switch on each Autopositioner switch stack closes first. If these switch sections do not operate properly, check contact adjustment as outlined in figure 6-1.

c. Cycle each Autopositioner through all of its positions, and note that it sets up properly on each channel.

NOTE

If the control unit used does not channel to 108.00 mc, channel the receiver to 136.00 mc and ground pin 20 of the receiver connector. This will allow adjustment to be made at the 108.00-mc position. Remove ground from pin 20 after synchronization at 108.00 mc has been checked.

d. If Autopositioner appears to be synchronized improperly, break the primary power input at the point where the dials indicate 108.00 mc and the pawls have engaged the stop wheels. Check S4, S5, S6, S7, S8, and S9 switch stators and rotors for orientation in accordance with figure 6-1. If adjustment is required, make sure on retightening clamping collars that end play is not limited by the collars.

e. Starting from 108.00 mc, cycle the 50-kc Autopositioner so that the inaccessible setscrew of the 50-kc drive gear clamping collar can be reached and tightened.

f. Starting from 108.00 mc, cycle the two-megacycle Autopositioner so that the inaccessible setscrew of the two-megacycle drive shaft collar can be reached and tightened.

g. Cycle receiver to 151.95 mc. Loosen top screw on differential clamp (see figure 6-1), and readjust position of tuning capacitor shaft so the index on the coupler lines up with the index on the capacitor. Connect the module in a test setup similar to that in paragraph 6.2.1.5, r-f alignment, and inject a 151.95-mc* signal into the set. Obtain an agc reading of three volts. Rock the tuning capacitor C2 back and forth until a peak reading is obtained. Keep the agc level below three volts by reducing the input to the receiver while making adjustments. Adjust lateral position of differential output shaft to allow 0.010 to 0.015 inch end play in the differential frame. Tighten both setscrews on the differential clamp. Make sure clamp is not limiting end play.

6.2 ELECTRICAL ALIGNMENT.

6.2.1 R-F AND VARIABLE I-F AMPLIFIER ALIGNMENT.

6.2.1.1 TEST EQUIPMENT REQUIRED. The following test equipments or their equivalents are required:

a. Receiver 51X-2 (under test).
b. Hewlett-Packard Model 410B VTVM.
c. Boonton Type 202B Signal Generator or Hewlett-Packard 608D.
d. Frequency measuring equipment.
e. D-c vtvm.
f. Frequency control selector such as Collins 614U-1, or equivalent.
g. Daven Audio Output Meter.
h. Patch cable.
i. Special alignment tool, 542 4587 002.

6.2.1.2 TEST CONDITIONS.

a. All tests herein specified shall be conducted under normal ambient conditions.

b. Power supply voltage: 115 v 300-1000 cps and/or 27.5 v d-c depending upon which power supply module is plugged into the 51X-2.

6.2.1.3 VARIABLE I-F ALIGNMENT.

a. Connect the module to the receiver with the patch cord.

*Note: Some sets are purchased with crystal complements that do not include reception frequencies higher than 135.95 mc. When one of these sets is encountered and an adjustment frequency of 151.95 mc is called out, use 135.95 mc instead. Adjustment frequencies between 135.95 and 151.95 mc then should be ignored. In this case, inject a 135.95-mc signal into the set, and rock the tuning capacitor back and forth until a peak reading is obtained.

b. Channel the 50-kc Autopositioner, and check output of all crystals of second oscillator for at least 1.5 v d-c at TP6.

c. Channel to low end of variable i-f (even + .00 mc). Inject variable i-f signal of 10.025 mc at first mixer grid of sufficient strength to obtain a reading on the agc line. Adjust slugs of L6 through L11 for maximum output.

d. Channel to high end of variable i-f (odd mc +.95 mc). Inject variable i-f signal of 11.975 mc, and adjust C16, C19, C21, C31, and C36 for maximum output.

e. Repeat steps c. and d. until no further improvement can be made. Always end up at the high end of the coil range.

6.2.1.4 ALIGNMENT OF FIRST CRYSTAL OSCILLATOR.

a. Set module to 150 mc (134 mc if receiver is not equipped for extended coverage).

b. With alignment tool, adjust slug of L34 (marked "150") (or L26 marked "134") for maximum d-c output (sharp peak) at TP7.

c. Channel module to each even megacycle, and adjust slug marked with the appropriate channel frequency for maximum output.

d. Remove P3 from J3. Channel module to each even megacycle, and check voltages at TP2 with a d-c vtvm. This voltage should be at least one volt.

e. Channel module to 112 mc. Connect vtvm to mixer grid (TP2), and adjust C53 for maximum output.

f. Channel module to 134 mc (146 mc if equipped for extended coverage). Adjust L37 with an insulated tool for maximum output.

g. Repeat steps e. and f. until no further improvement is obtained. Slightly touch up C53, if necessary, at 134 mc (146 mc if equipped for extended coverage) after completion of alignment procedure.

h. Loosely couple oscillator for frequency rack. Channel module to each even megacycle, and check frequency of each crystal according to the following table. If frequency is off more than 1000 cps, slightly readjust the appropriate slug of L13 through L35 to put the frequency within this range.

CAUTION

Do not detune slug so far that output voltage drops by more than 10%.

6.2.1.5 R-F ALIGNMENT.

a. Allow the module to remain connected to the receiver as in paragraph 6.2.1.3.

b. Channel module to 151.95 mc**. Feed in signal on antenna, and adjust C1, C3, C10, and C11 for maximum output on the agc line.

CAUTION

Keep input at a level which holds agc voltage below three volts.

c. Channel module to 108.00 mc, and retune signal generator to 108.00 mc. With an insulated tool, adjust inductors L1, L2, L4, and L5 for maximum agc. Adjust L1 at cold end of coil, L2 at hot end, L4 at cold end, and L5 at hot end.

d. Repeat steps a. and b. until no further improvement can be made. Always end up at 151.95 mc**.

CHANNEL FREQUENCY	CRYSTAL FREQUENCY (mc)
108	48.9875
110	49.9875
112	50.9875
114	51.9875
116	52.9875
118	53.9875
120	54.9875
122	55.9875
124	56.9875
126	57.9875
128	58.9875
130	59.9875
132	60.9875
134	61.9875
136*	62.9875
138*	63.9875
140*	64.9875
142*	65.9875
144*	66.9875
146*	67.9875
148*	68.9875
150*	69.9875

*Only in receivers equipped for extended coverage

6.2.2 EVALUATION TESTS OF R-F AND VARIABLE I-F AMPLIFIER MODULE.

The test setup is the same as in paragraph 6.2.1.

This test assumes that the i-f and audio module and the passive filter module are working satisfactorily.

Reference to the stage gain chart, figure 6-2, will aid in making this test.

6.2.2.1 VHF OSCILLATOR OUTPUT.

a. Record the deviation in frequency between that specified and that measured. Record d-c voltage at TP2 for each frequency.

**Refer to note in paragraph 6.1g.

TO SYNCHRONIZATION OF THE MODULE PER FOLLOWING NOTES (2 THRU 12) INSURE THE FOLLOWING:
SET SCREWS OF ALL CLAMPING COLLARS ARE LOOSE.
THAT BOTH AUTOPOSITIONER PAWLS ARE FULLY ENGAGED IN RESPECTIVE STOPWHEEL NOTCHES.
LY ALIGN ROTORS OF S4 FRONT AND S4 FRONT SEGMENT AS SHOWN IN DETAIL "A". THIS CORRESPONDS
KC AUTOPOSITIONER POSITION OF ".00" KC. INSURE THAT 50 KC DRIVE GEAR AND ITS RETAINING RING
NOT LIMIT AUTOPOSITIONER END PLAY. TIGHTEN LEFT SET SCREW (VIEWED FROM FRONT OF MODULE)
KC DRIVE GEAR CLAMPING COLLAR.
ON TUNING TABLE FOLLOWERS ON LOWEST "OPERATING" POINT ON CAMS. POSITION GEAR ITEM (AC)
OW .010 NOMINAL END PLAY OF CAM SHAFT AND FULLY TIGHTEN SET SCREWS IN POSITION SHOWN
AR CLAMPING COLLAR ITEM (AA).
LY ALIGN ROTOR OF S6 AS SHOWN IN DETAIL "A". LATERALLY POSITION S6 SWITCH DRIVE COLLAR
NOT TO LIMIT END PLAY OF THE CAM SHAFT, ITEM (AF) AND TIGHTEN THE COLLAR SET SCREWS.
ALLY CENTER THE ".00" POSITION ON THE 50 KC DIAL WITHIN THE BEARING PLATE APERTURE.
ON THE RIVETED DIAL DRIVE CAM ARM ON THE LOW POINT OF THE DIAL DRIVE CAM (1ST LOW POINT
ED WHEN ROTATING THE CAM COUNTERCLOCKWISE FACING THE FRONT OF THE UNIT) MESH THE
H DRIVE GEAR WITH THE DIAL CAM DRIVE GEAR AND THE GEAR ON THE 50 KC CAM SHAFT. ADJUST FOR
AL LATERAL FULL MESH. TIGHTEN THE SET SCREWS IN THE CLAMPING COLLAR AS SHOWN.
N COLLAR CLAMP ON REAR OF DIFFERENTIAL AND ADJUST TUNING CAPACITOR SO THE ROTOR PLATES
ENGAGE THE STATOR PLATES. POSITION ONE SET SCREW OF COLLAR ON BOTTOM AND THE OTHER
DS THE INSIDE. TIGHTEN BOTTOM SCREW ONLY.
N DIFFERENTIAL CAM CLAMPING COLLAR, ITEM (BA) AND POSITION DIFFERENTIAL CAM, ITEM (AD) SO
HE CAM FOLLOWER ARM JUST CLEARS THE HIGH POINT OF THE CAM AND RESTS ON THE LOWEST
TING POINT OF THE CAM. TIGHTEN SET SCREWS OF DIFFERENTIAL CAM CLAMPING COLLAR AS SHOWN.
LY ALIGN ROTORS OF S7 & S9 AS SHOWN IN DETAIL "A". THIS CORRESPONDS TO A 2 MC AUTO-
ONER SETTING OF "108" MC. TIGHTEN THE BOTTOM SET SCREW ON 2 MC DRIVE SHAFT COLLAR AS
.
ALIGNMENT OF S7 & S9 AND BEFORE ATTACHING COVER, ITEM (AH), ALIGN SWITCH ROTOR TAB OF S3
OWN. TIGHTEN SWITCH DRIVE COLLAR AS SHOWN.
ALLY CENTER THE 2 MC DIAL TO "108" WITHIN THE BEARING PLATE APERTURE. SEAT 2 MC DIAL
DRIVE COLLAR AGAINST RETAINING RING AND TIGHTEN SET SCREWS AS SHOWN.
LY ALIGN ROTOR OF S8 AS SHOWN IN DETAIL B. TIGHTEN THE SWITCH DRIVE COLLAR SET SCREWS
OWN.
CASES WHERE COLLARS TIGHTEN ON SPLIT HUBS, MAKE CERTAIN SET SCREWS DO NOT TIGHTEN
ON CROSS SLOTS IN HUB.
ETAIL C) SPRING LOAD THE DIFF. OUTPUT SHAFT PRIOR TO INSTALLATION OF THE RF AMPL
SSY, ITEM (AP) TO 8^{+1}_{-0} IN.OZ. (MEASURED WITH THE 50 KC CAM ARM FOLLOWER ON THE LOW POINT OF
AM). LOAD BY ROTATING THE SPRING LOADING IDLER GEAR CCW (VIEWED FROM FRONT).
E THAT ALL POROUS BRONZE (OILITE) BEARINGS ARE LUBRICATED WITH AN-O-6A OIL.
TO ASSEMBLY: COAT WORKING SURFACE ONLY OF CAMS WITH LUBRICANT 005 0334 00 AND WIPE OFF
SIBLE REMAINS. CAUTION: KEEP BORE OF CAM, ITEM (AD), FREE OF LUBRICANT.
ASSEMBLY, LUBRICATE WORKING SURFACE OF CAMS AND TUNING TABLE GUIDE SLOTS IN THE TABLE,
PLATE AND VAR. I.F. SUPPORT BRACKET WITH A THIN FILM OF LUBRICANT 005 0353 00.
ON: KEEP A/P CLUTCH SURFACES AND CLUTCH GEAR TEETH FREE OF FOREIGN CONTAMINANTS, (GREASE,
C.) AT ALL TIMES.
T THE CONTACTS ON SOLENOIDS K1 & K2 AS FOLLOWS: (CAUTION: REFER TO NOTE 20.)
SO THAT .020 MIN. GAP EXISTS BETWEEN CONTACTS WHEN THE SOLENOID IS DE-ENERGIZED AND
THE PAWL TIP IS FULLY SEATED IN A NOTCH IN THE STOP-WHEEL.
SO THAT THE MOTOR STARTING CONTACTS (i.e. THOSE TOWARD THE REAR OF THE MODULE) ARE
CLOSED WHEN THE PAWL TIP IS RESTING ON THE FACE OF THE STOP-WHEEL (SURFACE BETWEEN
NOTCHES).
SO THAT .015 MIN. OVER-TRAVEL (FOLLOW UP) IS EVIDENT WHEN THE SOLENOID IS IN THE FULLY
ENERGIZED POSITION.
SO THAT THE RECEIVER MUTING CONTACTS (THOSE TOWARD THE FRONT OF THE MODULE) CLOSE
PRIOR TO THE MOTOR STARTING CONTACTS.
EN SET SCREWS WHERE SPECIFIED USING 5 TO 6 INCH POUNDS OF APPLIED TORQUE.
T ONLY THE STATIONARY CONTACTS OF K1 AND K2. USE SMOOTH JAWED PLIERS AND ADJUST AT THE CENTER OF
RMS.

Figure 6-1. Mechanical Alignment Procedure

b. Channel the 50-kc Autopositioner, and check output of all crystals of second oscillator for at least 1.5 v d-c at TP6.

c. Channel to low end of variable i-f (even + .00 mc). Inject variable i-f signal of 10.025 mc at first mixer grid of sufficient strength to obtain a reading on the agc line. Adjust slugs of L6 through L11 for maximum output.

d. Channel to high end of variable i-f (odd mc +.95 mc). Inject variable i-f signal of 11.975 mc, and adjust C16, C19, C21, C31, and C36 for maximum output.

e. Repeat steps c. and d. until no further improvement can be made. Always end up at the high end of the coil range.

6.2.1.4 ALIGNMENT OF FIRST CRYSTAL OSCILLATOR.

a. Set module to 150 mc (134 mc if receiver is not equipped for extended coverage).

b. With alignment tool, adjust slug of L34 (marked "150") (or L26 marked "134") for maximum d-c output (sharp peak) at TP7.

c. Channel module to each even megacycle, and adjust slug marked with the appropriate channel frequency for maximum output.

d. Remove P3 from J3. Channel module to each even megacycle, and check voltages at TP2 with a d-c vtvm. This voltage should be at least one volt.

e. Channel module to 112 mc. Connect vtvm to mixer grid (TP2), and adjust C53 for maximum output.

f. Channel module to 134 mc (146 mc if equipped for extended coverage). Adjust L37 with an insulated tool for maximum output.

g. Repeat steps e. and f. until no further improvement is obtained. Slightly touch up C53, if necessary, at 134 mc (146 mc if equipped for extended coverage) after completion of alignment procedure.

h. Loosely couple oscillator for frequency rack. Channel module to each even megacycle, and check frequency of each crystal according to the following table. If frequency is off more than 1000 cps, slightly readjust the appropriate slug of L13 through L35 to put the frequency within this range.

CAUTION

Do not detune slug so far that output voltage drops by more than 10%.

6.2.1.5 R-F ALIGNMENT.

a. Allow the module to remain connected to the receiver as in paragraph 6.2.1.3.

b. Channel module to 151.95 mc**. Feed in signal on antenna, and adjust C1, C3, C10, and C11 for maximum output on the agc line.

CAUTION

Keep input at a level which holds agc voltage below three volts.

c. Channel module to 108.00 mc, and retune signal generator to 108.00 mc. With an insulated tool, adjust inductors L1, L2, L4, and L5 for maximum agc. Adjust L1 at cold end of coil, L2 at hot end, L4 at cold end, and L5 at hot end.

d. Repeat steps a. and b. until no further improvement can be made. Always end up at 151.95 mc**.

CHANNEL FREQUENCY	CRYSTAL FREQUENCY (mc)
108	48.9875
110	49.9875
112	50.9875
114	51.9875
116	52.9875
118	53.9875
120	54.9875
122	55.9875
124	56.9875
126	57.9875
128	58.9875
130	59.9875
132	60.9875
134	61.9875
136*	62.9875
138*	63.9875
140*	64.9875
142*	65.9875
144*	66.9875
146*	67.9875
148*	68.9875
150*	69.9875

*Only in receivers equipped for extended coverage

6.2.2 EVALUATION TESTS OF R-F AND VARIABLE I-F AMPLIFIER MODULE.

The test setup is the same as in paragraph 6.2.1.

This test assumes that the i-f and audio module and the passive filter module are working satisfactorily.

Reference to the stage gain chart, figure 6-2, will aid in making this test.

6.2.2.1 VHF OSCILLATOR OUTPUT.

a. Record the deviation in frequency between that specified and that measured. Record d-c voltage at TP2 for each frequency.

**Refer to note in paragraph 6.1g.

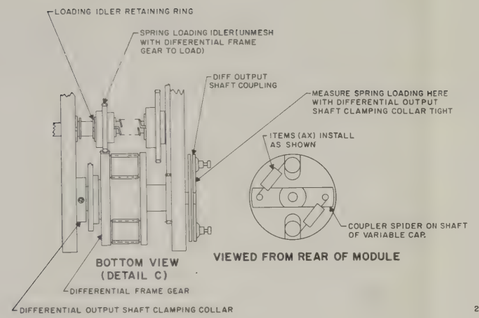

BOTTOM VIEW
(DETAIL C)

VIEWED FROM REAR OF MODULE

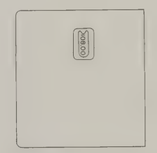

FRONT VIEW OF MODULE

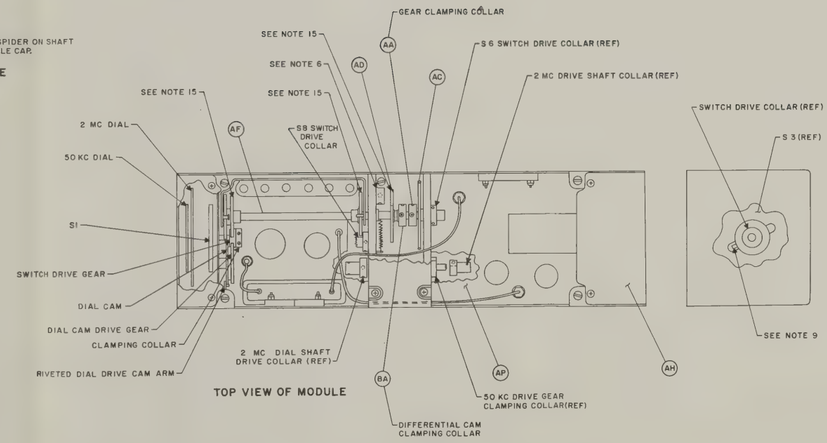

TOP VIEW OF MODULE

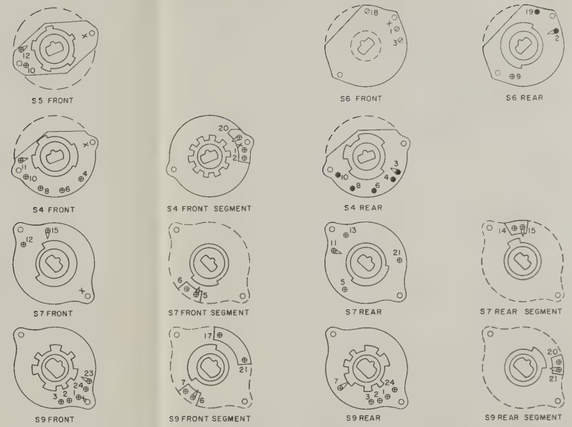

ALL SWITCHES VIEWED FROM REAR OF MODULE
(DETAIL A)

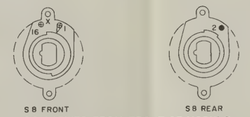

S8 VIEWED FROM FRONT OF MODULE
(DETAIL B)

KEY TO SWITCH SYMBOLS	
⊕	SHORT CLIP
⊕►	LONG CLIP
●	SHORT CLIP-REVERSED
●►	LONG CLIP-REVERSED
⊖	DUMMY CLIP

NOTES:

1. PRIOR TO SYNCHRONIZATION OF THE MODULE PER FOLLOWING NOTES (2 THRU 12) INSURE THE FOLLOWING:
   (A) SET SCREWS OF ALL CLAMPING COLLARS ARE LOOSE.
   (B) THAT BOTH AUTOPOSITIONER PAWLS ARE FULLY ENGAGED IN RESPECTIVE STOPWHEEL NOTCHES.
2. VISUALLY ALIGN ROTORS OF S4 FRONT AND S4 FRONT SEGMENT AS SHOWN IN DETAIL "A". THIS CORRESPONDS TO A 50 KC AUTOPOSITIONER POSITION OF ".00" KC. INSURE THAT 50 KC DRIVE GEAR AND ITS RETAINING RING DOES NOT LIMIT AUTOPOSITIONER END PLAY. TIGHTEN LEFT SET SCREW (VIEWED FROM FRONT OF MODULE) OF 50 KC DRIVE GEAR CLAMPING COLLAR.
3. POSITION TUNING TABLE FOLLOWERS ON LOWEST "OPERATING" POINT ON CAMS. POSITION GEAR ITEM (AC) TO ALLOW .010 NOMINAL END PLAY OF CAM SHAFT AND FULLY TIGHTEN SET SCREWS IN POSITION SHOWN ON GEAR CLAMPING COLLAR ITEM (AA).
4. VISUALLY ALIGN ROTOR OF S6 AS SHOWN IN DETAIL "A". LATERALLY POSITION S6 SWITCH DRIVE COLLAR SO AS NOT TO LIMIT END PLAY OF THE CAM SHAFT, ITEM (AF) AND TIGHTEN THE COLLAR SET SCREWS.
5. NOMINALLY CENTER THE ".00" POSITION ON THE 50 KC DIAL WITHIN THE BEARING PLATE APERTURE. POSITION THE RIVETED DIAL DRIVE CAM ARM ON THE LOW POINT OF THE DIAL DRIVE CAM (1ST LOW POINT REACHED WHEN ROTATING THE CAM COUNTERCLOCKWISE FACING THE FRONT OF THE UNIT) MESH THE SWITCH DRIVE GEAR WITH THE DIAL CAM DRIVE GEAR AND THE GEAR ON THE 50 KC CAM SHAFT. ADJUST FOR NOMINAL LATERAL FULL MESH. TIGHTEN THE SET SCREWS IN THE CLAMPING COLLAR AS SHOWN.
6. LOOSEN COLLAR CLAMP ON REAR OF DIFFERENTIAL AND ADJUST TUNING CAPACITOR SO THE ROTOR PLATES FULLY ENGAGE THE STATOR PLATES. POSITION ONE SET SCREW OF COLLAR ON BOTTOM AND THE OTHER TOWARDS THE INSIDE. TIGHTEN BOTTOM SCREW ONLY.
7. LOOSEN DIFFERENTIAL CAM CLAMPING COLLAR, ITEM (BA) AND POSITION DIFFERENTIAL CAM, ITEM (AD) SO THAT THE CAM FOLLOWER ARM JUST CLEARS THE HIGH POINT OF THE CAM AND RESTS ON THE LOWEST OPERATING POINT OF THE CAM. TIGHTEN SET SCREWS OF DIFFERENTIAL CAM CLAMPING COLLAR AS SHOWN.
8. VISUALLY ALIGN ROTORS OF S7 & S9 AS SHOWN IN DETAIL "A". THIS CORRESPONDS TO A 2 MC AUTO-POSITIONER SETTING OF "108" MC. TIGHTEN THE BOTTOM SET SCREW ON 2 MC DRIVE SHAFT COLLAR AS SHOWN.
9. AFTER ALIGNMENT OF S7 & S9 AND BEFORE ATTACHING COVER, ITEM (AH), ALIGN SWITCH ROTOR TAB OF S3 AS SHOWN. TIGHTEN SWITCH DRIVE COLLAR AS SHOWN.
10. NOMINALLY CENTER THE 2 MC DIAL TO "108" WITHIN THE BEARING PLATE APERTURE. SEAT 2 MC DIAL SHAFT DRIVE COLLAR AGAINST RETAINING RING AND TIGHTEN SET SCREWS AS SHOWN.
11. VISUALLY ALIGN ROTOR OF S8 AS SHOWN IN DETAIL B. TIGHTEN THE SWITCH DRIVE COLLAR SET SCREWS AS SHOWN.
12. IN ALL CASES WHERE COLLARS TIGHTEN ON SPLIT HUBS, MAKE CERTAIN SET SCREWS DO NOT TIGHTEN DOWN ON CROSS SLOTS IN HUB.
13. (SEE DETAIL C) SPRING LOAD THE DIFF. OUTPUT SHAFT PRIOR TO INSTALLATION OF THE RF AMPL SUB ASSY, ITEM (AP) TO $8\frac{1}{2}$ IN.OZ. (MEASURED WITH THE 50 KC CAM ARM FOLLOWER ON THE LOW POINT OF THE CAM). LOAD BY ROTATING THE SPRING LOADING IDLER GEAR CCW (VIEWED FROM FRONT).
14. INSURE THAT ALL POROUS BRONZE (OILITE) BEARINGS ARE LUBRICATED WITH AN-O-6A OIL.
15. PRIOR TO ASSEMBLY: COAT WORKING SURFACE ONLY OF CAMS WITH LUBRICANT 005 0334 00 AND WIPE OFF ALL VISIBLE REMAINS. CAUTION: KEEP BORE OF CAM, ITEM (AD) FREE OF LUBRICANT.
16. UPON ASSEMBLY, LUBRICATE WORKING SURFACE OF CAMS AND TUNING TABLE GUIDE SLOTS IN THE TABLE, GEAR PLATE AND VAR. I.F. SUPPORT BRACKET WITH A THIN FILM OF LUBRICANT 005 0353 00.
17. CAUTION: KEEP A/P CLUTCH SURFACES AND CLUTCH GEAR TEETH FREE OF FOREIGN CONTAMINANTS, (GREASE, OIL ETC.) AT ALL TIMES.
18. ADJUST THE CONTACTS ON SOLENOIDS K1 & K2 AS FOLLOWS: (CAUTION: REFER TO NOTE 20.)
    1. SO THAT .020 MIN. GAP EXISTS BETWEEN CONTACTS WHEN THE SOLENOID IS DE-ENERGIZED AND THE PAWL TIP IS FULLY SEATED IN A NOTCH IN THE STOP-WHEEL.
    2. SO THAT THE MOTOR STARTING CONTACTS (I.e. THOSE TOWARD THE REAR OF THE MODULE) ARE CLOSED WHEN THE PAWL TIP IS RESTING ON THE FACE OF THE STOP-WHEEL (SURFACE BETWEEN NOTCHES).
    3. SO THAT .015 MIN. OVER-TRAVEL (FOLLOW UP) IS EVIDENT WHEN THE SOLENOID IS IN THE FULLY ENERGIZED POSITION.
    4. SO THAT THE RECEIVER MUTING CONTACTS (THOSE TOWARD THE FRONT OF THE MODULE) CLOSE PRIOR TO THE MOTOR STARTING CONTACTS.
19. TIGHTEN SET SCREWS WHERE SPECIFIED USING 5 TO 6 INCH POUNDS OF APPLIED TORQUE.
20. ADJUST ONLY THE STATIONARY CONTACTS OF K1 AND K2. USE SMOOTH JAWED PLIERS AND ADJUST AT THE CENTER OF THE ARMS

Figure 6-1. Mechanical Alignment Procedure

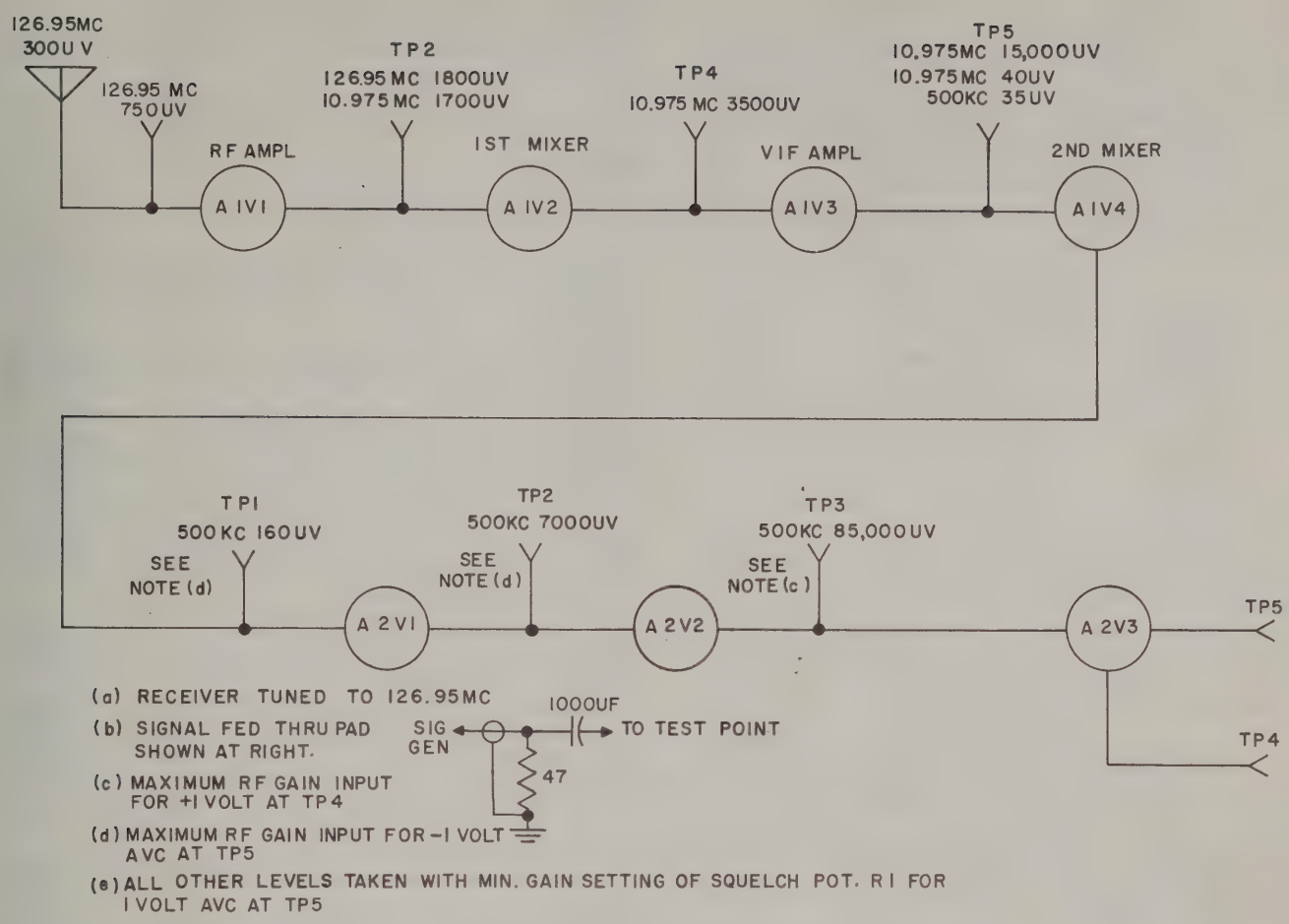

Figure 6-2. Stage Gain Chart

BAND	CRYSTAL FREQUENCY (mc)
108-110	48.9875
110-111	49.9875
112-113	50.9875
114-115	51.9875
116-117	52.9875
118-119	53.9875
120-121	54.9875
122-123	55.9875
124-125	56.9875
126-127	57.9875
128-129	58.9875
130-131	59.9875
132-133	60.9875
134-135	61.9875
136-137*	62.9875
138-139	63.9875
140-141	64.9875
142-143	65.9875
144-145	66.9875
146-147	67.9875
148-149	68.9875
150-151	69.9875

*Refer to note in paragraph 6.1g.

The frequency limits should not be more than plus or minus 1000 cps, and the output volts should be not less than 1.0 volt with P3 disconnected.

6.2.2.2 SENSITIVITY.

a. Channel module to 108.00 mc, and connect the signal generator to the antenna input jack. Set SQUELCH control for maximum gain.

b. Set signal generator output to three microvolts, and adjust generator for maximum agc.

c. Adjust signal generator modulation to 30% at 1000 cps.

d. Measure audio output at some point below 100 mw.

e. Remove modulation, and note audio output level. Record the decibel drop in audio level as the (S+N)/N ratio. It should be not less than six decibels.

f. Repeat steps a. through e. for each of the following frequencies: 108.00, 111.05, 114.10 117.15, 120.20, 123.25, 126.30, 129.35, 132.40, 135.45, 138.50** 141.55, 144.60, 147.65, 150.70, and 151.95 mc.

**Refer to note in paragraph 6.1g.

WH-h-3200

6.2.2.3 SQUELCH.

a. Channel module to 118.00 mc, and set squelch threshold control to open at 5 uv.
b. Channel receiver to each of the frequencies listed below, and record squelch threshold.

FREQUENCY	SQUELCH LEVEL
118.00	
120.30	
123.95	
124.30	
131.00	
139.90*	
140.90	
147.00	
151.95	
*Refer to note in paragraph 6.1g.	

Test limit not more than 2-to-1 squelch threshold variation. Resistors R25 and R26 may be changed to improve gain balance across the band.

6.2.2.4 AUTOMATIC VOLUME CONTROL.

a. Set module frequency at 115.00 mc.
b. Tune signal generator for maximum agc. Set output for 5 uv 30% modulated at 1000 cps.
c. Adjust audio gain for not more than 25 mw output for a zero reference.
d. Adjust the signal generator output to 100K uv, and record the decibel change in output level. Should be not more than four decibels.

6.2.3 500-KC PASSIVE FILTER ALIGNMENT.

This adjustment procedure permits alignment of all the tuned circuits in the 500-kc passive filter module except the input and output circuits. The input and output circuits are aligned after the module has been installed into the main frame of the receiver along with all other modules. See paragraph 6.2.5. This procedure requires the use of a set of short patch cables.

NOTE

Complete alignment of the filter normally is not required and should not be attempted unless it appears to be defective.

6.2.3.1 TEST EQUIPMENT REQUIRED. The following test equipments or their equivalents are required:

a. Patch cables.
b. Ballantine 314 VTVM.
c. Measurements Model 65B Signal Generator.
d. Frequency measuring equipment.
e. Special alignment tool, part number 542 4587 002.

6.2.3.2 TEST CONDITIONS.

a. All tests herein specified should be conducted under normal ambient conditions.
b. The associated test equipment should be allowed a 15-minute warmup period before any tests are performed.

6.2.3.3 ALIGNMENT PROCEDURE.

a. Remove r-f and variable i-f and i-f and audio modules, and connect with patch cables to main frame.
b. Remove the filter from the main frame by removing four screws and the two connectors, P2 and P3.
c. Remove the cover from the filter.
d. Reconnect P2 and P3, and place filter on frame so that all adjustments are accessible.
e. Channel the receiver to some frequency higher than 118.00 mc, and inject a 498-kc signal into the second mixer grid at TP5. Adjust SQUELCH control for minimum gain.
f. Connect Ballantine VTVM to J1.
g. Turn on power, and adjust signal level until a reading is obtained.
h. Short coil L2 to ground by shorting the exposed coil terminal to the filter base with a small screwdriver.
i. With alignment tool, adjust coil L1 for maximum indication on the vtvm using the position of the core nearest the base of the coil.
j. Remove the screwdriver short at L2, and place it at L3.
k. With alignment tool, adjust coil L2 for minimum vtvm indication using the position of the core nearest the base of the coil.
l. Repeat h. through k. according to the following chart.
m. Repeat h. through k.

STEP	SHORTED	COIL TUNED	VTVM INDICATION
1	L2	L1	Max
2	L3	L2	Min
3	L4	L3	Max
4	L5	L4	Min
5	L6	L5	Max
6	L7	L6	Min
7	L8	L7	Max
8	L9	L8	Min
9	L9	L9	Max

6.2.4 EVALUATION TESTS OF 500-KC PASSIVE FILTER.

Test setup remains the same as in paragraph 6.2.3.

6.2.4.1 INSERTION LOSS.

a. Adjust the signal generator for a convenient reading on the vtvm decibel scale. Note the reading.

b. Connect the vtvm to the filter output, J2. Record the decrease in vtvm reading. Should be not more than 2.5 db.

6.2.4.2 BANDWIDTH.

a. Adjust the signal generator step attenuator for a convenient reading on the vtvm connected to J2.
b. Sweep the passband, and locate the point of peak response.
c. Vary the generator above and below 500 kc, and determine the frequencies at which the vtvm reads down 4 db.
d. Record the two frequencies. The deviation of each should be not less than 20 kc, and the total should be not less than 40 kc.*
e. Locate the frequency of maximum response, and adjust signal generator input for a convenient reading on the vtvm.
f. Increase the frequency of the generator by at least 40 kc, and adjust the step attenuator to 1000 times that used in step e. Adjust the frequency until the reading of the previous step is obtained. Determine and record the frequency of this 60-db point. It should be not more than 46 kc away from 500 kc.
g. Decrease the frequency, and determine the low side 60-db attenuation frequency. Record this frequency. It should be not more than 46 kc away from 500 kc. The total bandwidth should be not more than 82 kc.

6.2.4.3 PASSBAND RIPPLE.

Reduce the generator output attenuator to that of step e. above, sweep the frequency range of 500 ±18 kc, and record the maximum variation of output in decibels. The peak-to-valley ratio should be not more than 3 db.

6.2.5 500-KC PASSIVE FILTER TOUCH-UP.

a. Reassemble the filter into the main frame.
b. Connect the Boonton 211A to the receiver input, and tune to the center of any channel. Check by tuning a loosely coupled 51J to 500 kc and adjusting generator frequency for zero beat.
c. Connect a d-c vtvm to TP5 on the i-f and audio module.
d. Tune the slugs of L1 and L9 of FL1 through the access holes in the side of the receiver for maximum vtvm indication.

6.2.6 I-F AND AUDIO MODULE ALIGNMENT.

The i-f and audio module requires little alignment but does require very specific evaluation. This module can be aligned right in the receiver.

6.2.6.1 TEST EQUIPMENT REQUIRED. The following test equipments or their equivalents are required:

a. Measurements 65B Signal Generator.
b. Frequency measuring equipment.
c. D-c vtvm.
d. Daven Audio Output Meter.
e. Hewlett-Packard 400C VTVM.
f. Measurements Model 82 Signal Generator.
g. Distortion Meter Hewlett-Packard 330D.
h. Special alignment tool, 542 4587 002.

6.2.6.2 TEST CONDITIONS.

a. All tests herein specified shall be conducted under normal factory ambient conditions.
b. Power supply voltage: 115 v 300-1000 cps and/or 27.5 v d-c depending upon which power supply module is plugged into the 51X-2.
c. Warmup period: 15 minutes.

6.2.6.3 PRELIMINARY TESTS. Before applying power, disconnect P1, and measure resistance from pin 18 of P1 to ground. This resistance should be approximately 20 ohms. Measure the resistance from pins 6 and 17 to ground. These resistances should be about 30K ohms to 33K ohms respectively. Reconnect P1.

6.2.6.4 ELECTRICAL ALIGNMENT.

a. Connect module, and check that tubes light. Set receiver to any convenient channel about 117.95 mc.
b. Inject 500-kc signal at input of i-f amplifier (TP1) from Measurements 65B Signal Generator, and align transformers T1 and T2 using tuning tool. Connect d-c vtvm to TP5, and adjust cores on top and bottom of T1 and T2 for maximum output.

CAUTION

Adjust input to keep meter on 3-v scale.

c. Tune top core (primary) of T3 for maximum output at TP5.
d. Tune bottom core (secondary) of T3 for minimum output at TP5.

CAUTION

In adjusting T1, T2, and T3, tune to the first resonance encountered as the slugs move into the coil.

6.2.7 EVALUATION TEST OF I-F AND AUDIO MODULE.

The test setup remains the same as in paragraph 6.2.6.

*If total bandwidth meets requirements at 4 db but plus and minus deviations are not met, realign filter at slightly different frequency in order to make passband more symmetrical about 500 kc.

6.2.7.1 SELECTIVITY.

a. Connect Measurements 65B Signal Generator to input of i-f (at TP1). Accurately set the frequency to 500 kc.

b. Adjust input level to 300 uv, and note reference output level as read on the vtvm at TP5.

c. Adjust generator output level to 380 uv, and adjust generator frequency to either side of resonance until reference vtvm indicator noted in step b. is obtained.

d. Measure the + and -2 db frequencies. Should be not less than 40 kc total.

e. Adjust the signal generator output level to 30,000 uv, and repeat steps c. and d. for the 40-db points. Should be not more than 210 kc total.

6.2.7.2 GAIN.

Adjust signal generator output for 300 uv at 500 kc. Measure the agc voltage at TP5. Should be not less than 2.0 volts.

6.2.7.3 SQUELCH.

a. With SQUELCH control on receiver set for maximum gain and signal generator set for 30% modulation, measure the input required at 500 kc to just open the squelch and to just close the squelch. Should be not more than 150 uv.

b. With SQUELCH control set for minimum gain and signal generator set for 30% modulation, measure the input required at 500 kc to just open the squelch. Should be not less than 4500 uv.

c. With SQUELCH control set for about three microvolts, measure the input required to just open squelch and to just close squelch. Ratio should be not more than three decibels.

d. With about 3 uv, measure the squelch opening point at 10%, 30%, and 90% modulation. The ratio from maximum to minimum modulation should be not more than three decibels.

6.2.7.4 NOISE LIMITER.

a. Set the 65B Signal Generator to 1000 uv output, and connect oscilloscope to TP7.

b. Modulate the signal generator with 1000 cps, and increase the percentage modulation until clipping is observed on the oscilloscope. Record the percentage modulation at which clipping occurs. It should be not less than 70%.

6.2.7.5 AUTOMATIC VOLUME CONTROL.

a. Adjust the signal generator for 250 uv at 30% modulation at 1000 cps.

b. Adjust AURAL LEVEL control (R18) for 25 mw output into 500 ohms.

c. Adjust the signal generator to 50,000 microvolts, and record the decibel change in output using the output level of 25 mw as a reference. Should be not more than four decibels.

d. Adjust signal generator to 100,000 microvolts. Cut off signal, and note the rate of voltage drop at TP5 using the vtvm.

e. Adjust the receiver frequency to any channel below 118.00 mc. Repeat step d. Note that rate of voltage drop is considerably slower.

6.2.7.6 ATCSS OUTPUT LEVEL AND FREQUENCY RESPONSE.

a. Connect Hewlett-Packard 400C VTVM to ATCSS output of i-f and audio module.

b. Connect the Measurements Model 82 Signal Generator to the input of the i-f and audio module (TP1), and adjust for 200 uv and 30% modulation at 500 kc. Leave receiver set below 118.00 mc.

c. Set the ATCSS level potentiometer (R12) for 0.5 v output at 1000 cps.

d. Measure the voltage output at the modulation frequencies specified below, taking care to keep the modulation percentage at 30%. There should be not more than 6 db maximum to minimum.

FREQUENCY (cps)

30	3,000
100	10,000
300	15,000
1000	22,000

6.2.7.7 AUDIO OUTPUT LEVEL AND FREQUENCY RESPONSE.

a. Connect Daven Output Meter to audio output terminals of i-f and audio module.

b. Inject a signal generator output of 200 uv, 30% modulated with receiver tuned above 118.00 mc.

c. Adjust AURAL LEVEL control (R18) for 100 mw out with 1000-cps modulation.

d. Measure the response at the following modulation frequencies: 120, 300, 1000, 3750, and 5750 cps. Response should be not less than -20 db at 120 and 5750 cps. From 300 to 3750 cps, the response should vary no more than 6 db.

e. Readjust AURAL LEVEL control (R18) for 100 mw out at 1000 cps with receiver tuned below 118.00 mc. Channel receiver above 117.95 mc, and record decibel decrease in output. Should be not less than three decibels.

6.2.7.8 AUDIO DISTORTION.

a. Using the 65B Signal Generator and the Hewlett-Packard 330D Distortion Meter, measure the distortion at the audio output using a 1000-cps input, 1000 uv, and 30% and 90% modulation. Maintain 100 mw output for each condition. At 30%, distortion should be not more than 7.5%; at 90%, not more than 20%.

b. Repeat measurements at 400 and 3000 cps using an r-f input of 200 uv. The distortion should be not more than 7.5% at 30% modulation and not more than 20% at 90% modulation at either frequency.

NOTE

The 51X-2 is set at the factory for 100-mw output with a 1000-uv signal modulated 30% with a 1000-cps audio signal. This setting will

give a power output of approximately 50 mw in the communication band. This power output may be too high for the particular installation. If it is, adjust the AURAL LEVEL control, R18, in the i-f and audio module to a level suitable for the particular installation.

6.2.7.9 RECEIVER DISABLE.

a. Feed a 1000-uv, 1000-cps, 30 % modulated signal to the i-f input.
b. Disable receiver by applying 27.5 v to rear connector pin number 23, and note that:

(1) Receiver audio disappears.
(2) Agc voltage drops.
(3) ATCSS output disappears.
(4) The 27 v on pin 19 of the rear plug disappears.

6.2.7.10 ADJUSTMENT OF TRANSIENT BLANKER CIRCUIT IN 516B-3 D-C POWER SUPPLY.

a. Connect an adjustable d-c power supply capable of adjustment from 20 to 36 volts to the 27.5-volt input, terminal 2 of P1 of the 51X-2.
b. Set R3 of the d-c power supply module 516B-3 to full counterclockwise position.
c. Adjust the input voltage to 34 v d-c.
d. Rotate R3 clockwise until output voltage drops down to nearly zero. The output voltage will drop sharply at some point in the rotation of R3.
e. Starting at approximately 20 volts input, raise the input voltage to 516B-3 until its output voltage drops off sharply. If the output voltage drops off at or near 36 volts and does not show signs of dropping off at 30 to 32 volts input, then R3 needs no further adjustment.

6.2.7.11 ALTERNATE METHOD OF ADJUSTING THE TRANSIENT BLANKER. This method of setting the transient blanker does not require variable d-c source.

a. Set R3 counterclockwise to its limit.
b. Connect a vtvm set to its 0-5 v or equivalent scale to the terminals of Zener diode CR3.
c. Connect a 0 to 150 voltmeter to B plus terminal 2 of capacitor C1. R8 also ties to this terminal.
d. Apply 27.5 v d-c to the receiver.
e. Turn potentiometer R3 clockwise until B plus voltage starts to drop.
f. Observe the voltage on the vtvm.
g. Continue to rotate R3 counterclockwise until the vtvm reads 0.3 volt less than the voltage in step f.

6.3 SERVICING TRANSISTOR CIRCUITS.

6.3.1 GENERAL.

Servicing procedures and test equipments that have been used in the past with other types of electronic equipment, for the most part, may be used with transistor circuits. Some special precautions which must be used are listed below. If the equipment under test contains transistors, even though they may not be in the circuits under test, the precautions should be observed because of the possibility of accidentally contacting a transistor circuit.

6.3.2 TEST EQUIPMENT.

Damage to transistors by test equipment usually is the result of accidentally applying too much current or voltage to the transistor elements. Common causes of damage from test equipment are as follows.

6.3.2.1 TRANSFORMERLESS POWER SUPPLIES. Test equipment with transformerless power supply is one source of such current. This type of test equipment can be used by employing an isolation transformer in the power line.

6.3.2.2 LINE FILTER. It is still possible to damage transistors from line current, even though the test equipment has a power transformer in the power supply, if the test equipment is equipped with a line filter. This filter may act like a voltage divider and apply 55 volts a-c to the transistor. To eliminate trouble from this situation, connect a ground wire from the chassis of the test equipment to the chassis of the equipment under test before making any other connections.

6.3.2.3 LOW SENSITIVITY MULTIMETERS. Another cause of transistor damage is a multimeter that requires excessive current for adequate indications. Multimeters that have sensitivities of less than 5000 ohms per volt should not be used. A multimeter with lower sensitivity will draw too much current through many types of transistors and damage them. Use of 20,000-ohm-per-volt meters or vacuum-tube voltmeters is recommended. Check the ohmmeter circuits (even those in vtvms) on all scales with an external, low resistance milliammeter in series with the ohmmeter leads. If the ohmmeter draws more than one milliampere on any range, this range cannot be used safely on small transistors.

6.3.2.4 POWER SUPPLY. Always use fresh batteries of the proper value for the equipment under test in test power supplies. Never use battery eliminators because the regulation of these devices is poor at the current values drawn by transistor circuits. Be certain about identification of polarity before attaching the battery to the equipment under test; polarity reversal may damage the transistor.

6.3.3 ELECTRIC SOLDERING IRONS.

The following are possible causes of transistor damage from soldering irons.

6.3.3.1 LEAKAGE CURRENT. Electric soldering irons may damage transistors through leakage current. To check a soldering iron for leakage current, connect an a-c voltmeter between the tip of the iron and a ground connection (water pipe or line ground), allow the iron to heat, then check for a-c voltage with the meter. Reverse the plug in the a-c receptacle, and again check for voltage. If there is any

indication on the meter, isolate the iron from the a-c line with a transformer. The iron may be used without the isolation transformer if the iron is plugged in and brought to temperature then unplugged for the soldering operation. It also is possible to use a ground wire between the tip of the iron and the chassis of the equipment being repaired to prevent damage from leakage current.

6.3.3.2 IRON SIZE. Light duty soldering irons of 20 to 25 watts capacity are adequate for transistor work and should be used. If it is necessary to use a heavier duty iron, wrap a piece of number 10 copper wire around the tip of the iron, and make it extend beyond the tip of the iron. Tin the end of the piece of copper wire, and use it as the soldering tip.

6.3.4 SERVICING PRACTICES.

6.3.4.1 HEAT-SINK WHEN SOLDERING. When installing or removing a soldered-in transistor, grasp the lead to which heat is being applied, between the solder joint and the transistor, with long-nosed pliers to bleed off some of the heat that conducts into the transistor from the soldering iron. Make sure that the wires that are being soldered to transistor terminals are pretinned properly so that the connection can be made quickly. Excessive heat will permanently damage a transistor.

6.3.4.2 REMOVAL OF TRANSISTORS FROM OPERATING CIRCUITS. Never remove or replace a plug-in transistor when the supply voltage is turned on. Transients thus produced may damage the transistor or others remaining in the circuit. If a transistor is to be evaluated in an external test circuit, be sure that no more voltage is applied to the transistor than normally is used in the circuit from which it came.

6.3.4.3 PLUG-IN TRANSISTORS. When servicing equipment that uses plug-in transistors, it is good practice to remove the transistors from their sockets and reinsert them to break down any film of corrosion or dirt that may have formed.

6.3.4.4 RESISTANCE MEASUREMENTS IN TRANSISTOR CIRCUITS. See figure 6-3. When measuring resistances of circuits containing transistors or mineral diodes, remember that these components are polarity and voltage conscious; therefore, follow the directions of the notes that are given on the resistance tables or drawings to be sure that the correct polarity and range is applied to the circuit from the ohmmeter. Usually, any capacitors used in transistor circuits are of large values (especially in audio, servo, or power circuits), and it takes time to charge these capacitors when an ohmmeter is connected to a circuit in which they appear. Any reading obtained is subject to error if the capacitor is not allowed time to charge fully. In some cases, it may be best to isolate the components in question and to measure them individually.

6.3.4.5 POWER TRANSISTOR HEAT-SINKS. In some cases, power transistors are mounted on heat-sinks that are designed to carry heat away from them. In some power circuits, the transistor also must be insulated from ground. This insulating is done by means of insulating washers made of fiber and mica. When replacing transistors mounted in this manner, be sure that the insulating washers are replaced in proper order. Before installing the mica washers, treat them with a film of silicone fluid, Collins part number 005 0273 00, or equivalent. This treatment helps in the transfer of heat. After the transistor is mounted and before making any connections to it, check from the case to ground with an ohmmeter to see that the insulation is effective.

6.3.4.6 TEST PRODS. Test prods should be clean and sharp. Because many of the resistors used in transistorized equipments have low values, any additional resistance produced by a dirty test prod will make a good resistor appear to be out of tolerance.

In miniaturized equipment, the clearance between socket terminals, wires, and other components usually is very small. It is a good practice to cover all of the exposed tip of the test prod, except about one-eighth inch, with plastic tape or other insulation.

6.3.5 TROUBLE SHOOTING.

The usual trouble-shooting practices apply to transistors. Be sure the test equipment and tools meet the requirements outlined in the above paragraphs. It is recommended that transistor testers be used to evaluate the transistor.

6.3.5.1 OHMMETER TEST OF TRANSISTORS. If a transistor tester is not available, a good ohmmeter may be used for testing. Be sure the ohmmeter meets the requirements as set forth in the paragraph on test equipment, above. To check a PNP transistor, connect the positive lead of the ohmmeter to the base and the negative lead to the emitter. (The red lead is not necessarily the positive lead on all ohmmeters.) Generally, a resistance reading of 50,000 ohms or more should be obtained. Connect the negative lead to the collector; again a reading of 50,000 ohms or more should be obtained. Reconnect the circuit with the negative lead of the ohmmeter to the base. With the positive lead connected to the emitter, a value of resistance in the order of 500 ohms or less should be obtained. Likewise, with the positive lead connected to the collector, a value of 500 ohms or less should be obtained.

Similar tests made on an NPN transistor produces results as follows: With the negative ohmmeter lead connected to the base, the value of resistance between the base and the emitter and between the base and the collector should be high. With the positive lead of the ohmmeter connected to the base, the value of resistance between the base and the emitter and between the base and collector should be low. If the readings do not check out as indicated, the transistor probably is defective and should be replaced.

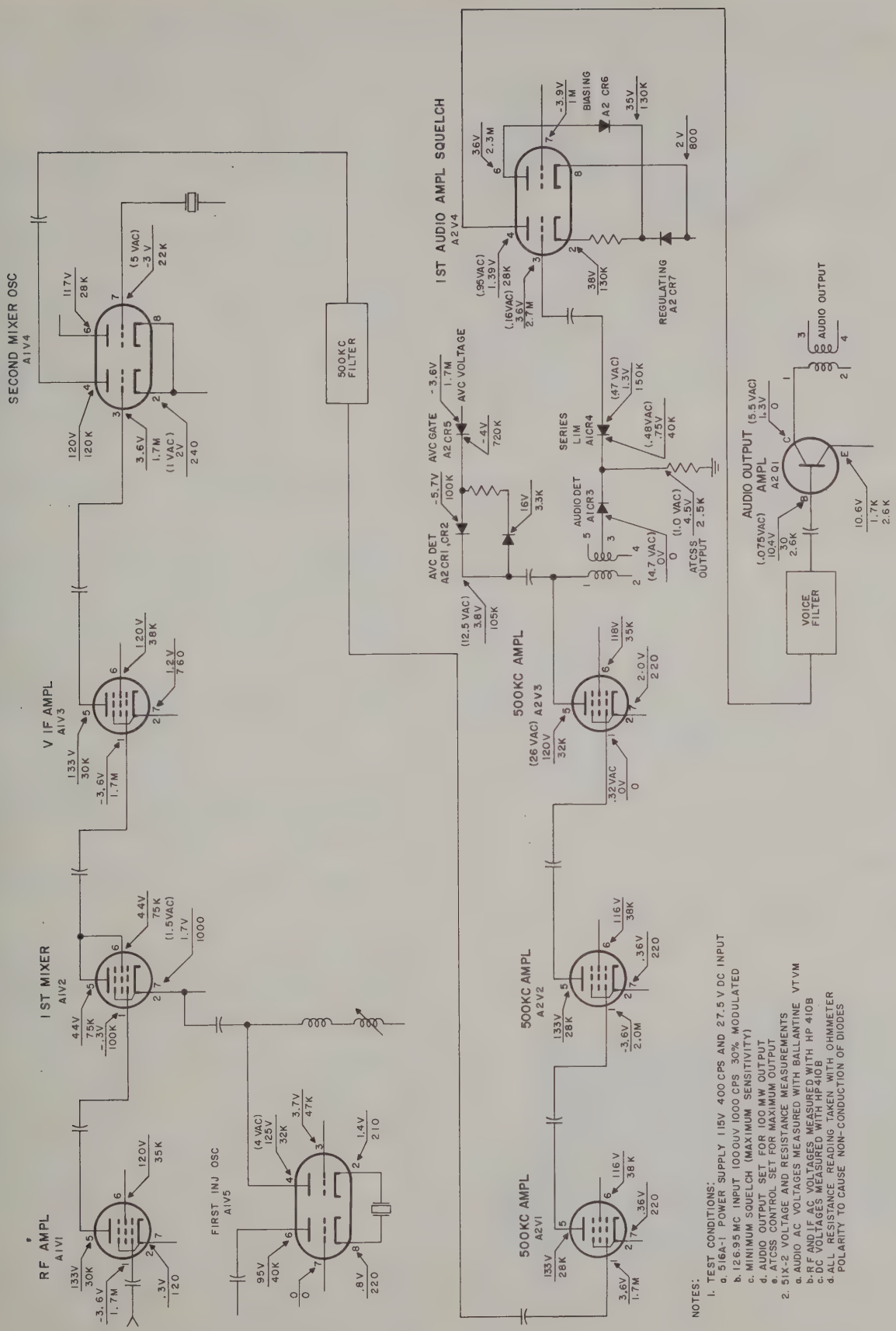

Figure 6-3. Receiver 51X-2, Resistance and Voltage Measurements

CAUTION

If a defective transistor is found, make sure that the circuit is in good operating order before inserting the replacement transistor. If a short circuit exists in the circuit, plugging in another transistor will most likely result in another burned out transistor. Do not depend upon fuses to protect transistors.

Make sure that the value of the bias resistors in series with the various transistor elements are as shown on the schematic diagram. The transistor is very sensitive to improper bias voltages; therefore, a short or open circuit in the bias resistors may damage the transistor. For this reason, do not trouble shoot by shorting various points in the circuit to ground and listening for clicks.

6.4 DISASSEMBLY PROCEDURES.

The following procedures are recommended for disassembly of Receiver 51X-2 for maintenance or adjustment purposes.

6.4.1 REMOVAL OF RECEIVER FROM SHOCKMOUNT AND EXTERIOR CASE.

a. Loosen two hold-down nuts on the front of the shockmount allowing the nuts to be disengaged, and drop the front panel down.

b. Turn the center extractor nut counterclockwise to disengage receiver from rear connector.

c. Lift receiver up and out of shockmount.

d. Loosen locking screw in the center of the rear of the dust cover case.

e. Hold case, and pull receiver out of the case with the front handle.

6.4.2 REMOVAL OF MODULES.

See figure 6-4. The r-f and variable i-f module on top and the i-f and audio module on the bottom of the main chassis may be removed by loosening the captive-type hold-down screws on each module and lifting the modules straight up. Do not twist or pry on the module to disengage mating connectors, or damage to the connectors may result. To remove the 500-kc filter module, the other three modules must be removed first, then the two coaxial connectors must be unfastened. Remove four flathead screws, and lift filter out.

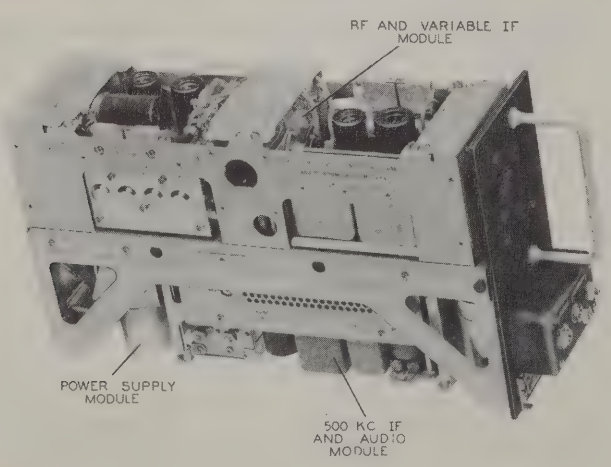

Figure 6-4. Navigation and Communications Receiver 51X-2, Right Oblique View

6.4.3 REMOVAL OF MODULE COVERS.

To gain access to the components in the r-f and variable i-f section of the r-f and variable i-f module, remove the screws and lock washers of the two covers on the bottom of the module. To gain access to the components in the i-f and audio module, remove the wrap-around cover. See figure 7-17. To gain access to 500-kc filter components, remove wrap-around cover. See figure 7-13.

6.4.4 REPLACEMENT OF CRYSTALS IN LOW-FREQUENCY OSCILLATOR.

This operation may be done with the r-f and variable i-f module removed from the main frame and no further disassembly. Remove four flathead and two Phillips-head screws mounting the end cover (see figure 7-3) enclosing dial and crystal switch. Lift out on the bottom edge of the cover and remove. Remove three Truarc rings securing escutcheon plate to the standoffs. Remove dials by loosening collar H2 on MP14 (see figure 7-11) and sliding dial out of module. Replace crystals as desired using care not to overheat crystals. Reassemble in reverse order seeing that proper switch position is picked on dial shaft insertion and that proper dial synchronization is maintained.

6.4.5 REPLACEMENT OF CRYSTALS IN VHF OSCILLATOR.

See figure 7-8. This operation can be done with the module removed from the main frame and with no further disassembly. Remove four flathead and two Phillips-head screws mounting the cover enclosing vhf oscillator. See figure 7-3. Remove cover, top side first, and slide off. Loosen two setscrews on the switch drive collar, and remove drive collar. Remove three Truarc rings on parts supporting the crystal switch. Unsolder the two wires connected to the crystal board and the end of the 0.22-uuh choke, L35, fastened to the tuning coil. Lift the crystal unit out. Crystals may be replaced as desired using care not to overheat crystals. Check to see that switch clips have not been misaligned in the replacement procedure. Replace the crystal board making sure that its rotor is aligned correctly with the other switches. Reassemble in reverse order. If it is desired to complete the crystal complement to obtain use of the frequencies in the range 135.0 to 151.95 mc, eight crystals must be added. Remove the crystal unit as explained above. Remove the two bus wire hold-downs, and add the crystals in the correct order.

Trim the ends of the crystal leads as required, and make solder connections equivalent to factory installed units. Replace the parts in a reverse procedure.

6.4.6 REMOVAL OF TUNING MOTOR B1.

See figure 7-3. Disengage J6 and P6 by removing two mounting screws and cover clamp. Disengage coaxial connector P4. Remove three motor mounting screws on motor mounting flange. Tip motor up and out. The motor terminal cap may have to be removed before motor can be completely lifted out. Replace in reverse order making sure that motor drive gear is not forced into two clutch drive gears in Autopositioner mechanism.

6.4.7 REMOVAL OF VARIABLE I-F COIL ASSEMBLY. (May be removed from complete module.)

See figures 7-3 and 7-4. The coils may be removed in banks of three each as follows: Unsolder all leads connecting to each bank of coils. Remove respective loading spring MP1 or MP2 (see figure 7-3). Remove three coil securing Truarc rings from each bank of coils. Remove three trimmer capacitor mounting nuts and lock washers. Remove screw fastening the banks of coils together to interstage shield. Remove coil bank assembly. Remove two screws, and pull out assembly from shield cam. Reassemble in reverse order.

6.4.8 REMOVAL OF VHF OSCILLATOR SWITCH ASSEMBLY TO GAIN ACCESS TO OSCILLATOR TUBE SOCKET COMPONENTS. (Can be done in module form.)

Remove cover as explained previously. Remove drive shaft collar as before. Unsolder four wires going from XV5 to the three switchboards. Unsolder the wires from tuner Z1 to the feedthrough capacitor, C47. Unsolder the wire from the tuner Z1 feeding through TP3 (TP3 access hole). Remove four Phillips-head mounting screws and flatwashers. Lift out assembly of three boards, S2, S3, and Z3, making sure not to lose the ground clips, E64. The three switchboards may be further disassembled if required and, if done, should be reassembled with care to keep proper alignment between rotors and doubled "D" drive shaft holes in order to insure proper torque free assembly. Replace all spacers H24, 19, 21 and grounding clips E64 (see figures 7-8 and 7-5) in same manner as removed, reassemble switch package in reverse order to removal, and resolder wires. Make sure rotors line up at correct alignment point.

6.4.9 REMOVAL OF R-F SUBASSEMBLY FROM VARIABLE I-F MODULE.

See figures 7-6 and 7-3. Remove end plate enclosing vhf oscillator. Remove cover enclosing r-f components. Disengage P5 and J5 by removing the screws and cover clamp. Remove two module mounting screws by slipping off the Truarc rings. Disengage two coaxial connectors, P3 and P2. Remove two loading springs MP35 on coupler driving four-gang capacitor by lifting off one end of each. Remove seven flathead mounting screws securing r-f subassembly to frame. Slide r-f subassembly out of the frame. Reassemble in reverse order, but prior to reassembly, pinch split drive shaft MP18 slightly (figure 7-5) to insure backlash free drive to vhf oscillators, and check rotor alignment of vhf oscillator stack for conformance to frequency indicated by dials, and check four-gang capacitor position to insure that it is the same as when disassembled.

6.4.10 REMOVAL OF VARIABLE I-F SUBASSEMBLY.

See figures 7-3 and 7-4. Remove end plate enclosing l-f oscillator. Disengage J6 and P6 by removing two mounting screws and clamp. Disengage coaxial connector P4. Remove frequency selector cover (figure 6-4) by removing three mounting screws. Disconnect coaxial connector P3 in r-f subassembly. Remove two module mounting screws by removing Truarc rings, and lift out. Loosen setscrews on 50-kc differential cam collar H2, 50-kc drive shaft gear collar H2, and S6 drive shaft collar H8 (see figure 7-3). Remove bottom cover of variable i-f subunit. Remove six flathead screws securing variable i-f subunit to frame. Remove one Phillips-head screw securing variable i-f subunit to gear plate. Slide the variable i-f subunit out of the frame along with the slug rack drive shaft, MP6. Previous to reassembly, pinch split shaft MP13 slightly (figure 7-12) to insure minimum backlash. Reassembly in reverse fashion, and check for proper end play in 50-kc drive shaft MP6, switch alignment, cam alignment, and dial indication before tightening setscrews in collar. Make sure setscrews do not fall in slots of hubs, the differential cam spring MP34 is in location, and the collar does not limit end play.

6.4.11 REMOVAL OF FREQUENCY SELECTOR SWITCHES.

See figures 7-3, 7-18, 7-20, and 7-22. The r-f subassembly must be removed from the frame to remove S4, S5, S6, S7, and S9. On reassembly of any switches removed, insure that correct spacers are used and that rotors are aligned with other switches on same shaft. Reglyptal-lock all switch mounting screws on reassembly. Check for pinched wires. S6 may be replaced by unsoldering wires and removing two mounting screws and spacers H16, figures 7-18 and 7-22. Resolder wires, and replace R25 and R26 in the correct position, and position rotor on reassembly. S4 may be replaced by unsoldering wires and removing two mounting screws. Replace and resolder wires, and position rotor in correct alignment with rotor of S5 in reassembly. S5 may be removed by removing drive collar on S7 and S9 shaft, H5 (figure 7-20) and removing the two mounting screws securing S4 and S5 and the screws securing S7 and S9. Lift S4 and S9 out of the way, and replace S5. Reassemble, checking rotors and spacers for correct assembly. S9 may be removed by removing drive collar and two screws mounting S7 and S9 as well as S4 and S5. Lift S4 out of the way, and replace S9. Reassemble checking rotors and spacers for correct assembly. S7 may be

removed by removing drive collar H5 and screws mounting S4, S5, S7, and S9. Lift S4, S5, and S9 out of the way, and replace S7. Reassemble, checking rotors and spacers for correct assembly.

S8 may be removed by first removing variable i-f unit assembly and then removing two Truarc rings holding S8. Replace, checking for correct rotor alignment.

6.4.12 DISASSEMBLY OF FREQUENCY SELECTOR.

See figures 7-3, 7-4, 7-18, 7-19, 7-20, and 7-22. The frequency selector may be removed in two manners. The r-f and variable i-f subassembly may be removed first, then the frequency selector package removed as follows: Remove 12 flathead screws securing selector to frame. Remove two screws securing plug P1 to frame. Remove module mounting screw, and slide out entire assembly. Alternatively, remove end cover over l-f oscillator and the three module mounting screws in the variable i-f subassembly and frequency selector package. Disconnect plugs J5-P5, two coaxial connectors P2-P3 in r-f subassembly, and P6-J6 in r-f subassembly. Remove one end of loading spring MP35 on variable four-gang capacitor drive shaft. Remove all flathead screws mounting variable i-f and frequency selector package to frame. Slide out entire package. Refer to figures 7-18, 7-19, 7-20, 7-21, 7-22, 7-23, 7-24, and 7-25 during breakdown of selector package. Remove drive motor B1, switch S8, and by lifting cable out of the way, access can be had to the left-hand gear plate. Remove gear plate by removing three screws from posts H14, H15, collar H7, H6, and Truarc rings and washers H11 and H12 on positioner shafts MP25 and MP27. Be sure to keep shim washers counted so that exact number removed can be returned on reassembly. Further disassembly is outlined in figures 7-23, 7-24, and 7-25, but in no case should the clutch assemblies be further dismantled than shown in figure 7-25. Replacement of solenoid assembly L41 and L42 is shown in figure 7-25. The armatures MP30 and MP31 may be removed by removing two special screws MP9. Upon reassembly, use glyptal lock on threads only of the two screws. Make sure screws are seated fully.

In reassembling frequency selector package, replace all parts as removed, and insure that all screws are tightened. Relubricate according to paragraph 5.4, but in no case lubricate clutches or contaminate them in any manner. Reassemble switches and motor making sure no wires are pinched. Recheck mechanical alignment according to figure 6-1. Make sure that collars driving switches and cams do not limit end play of shaft MP25, MP27, MP22, MP23. Reassemble frequency selector package and variable i-f and r-f subunits into frame. Resynchronize switches according to figure 6-1.

SECTION VII
PARTS LIST

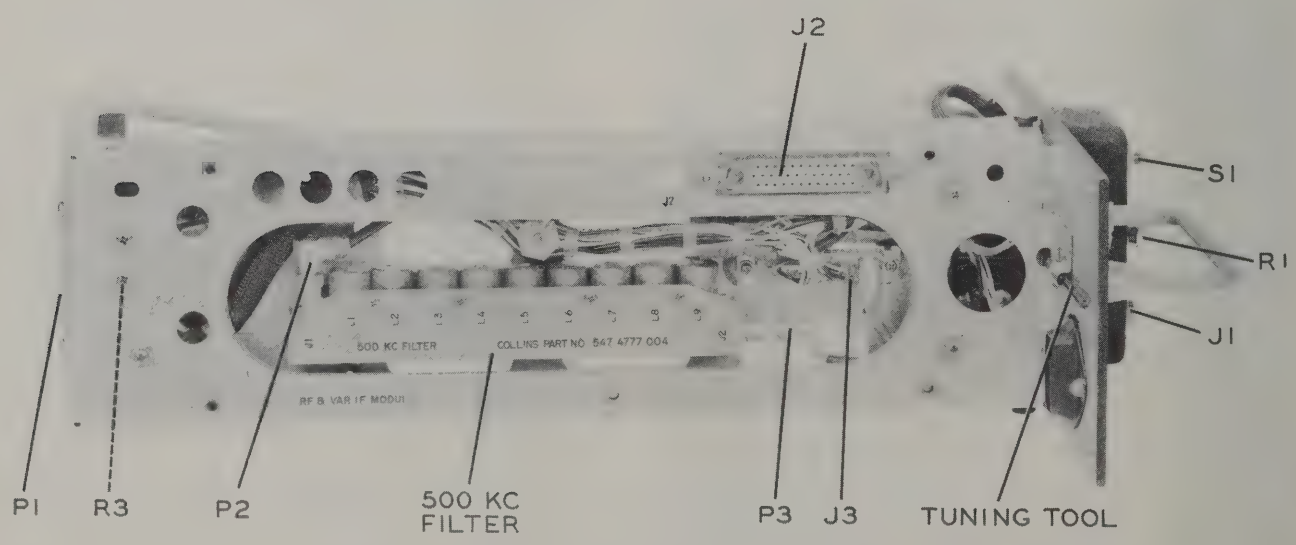

Figure 7-1. Receiver 51X-2, Main Frame, Top

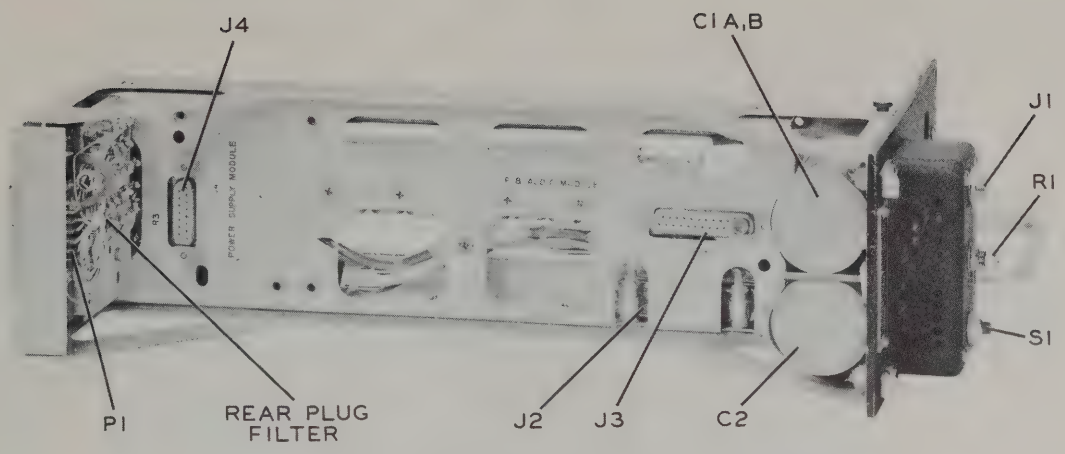

Figure 7-2. Receiver 51X-2, Main Frame, Bottom

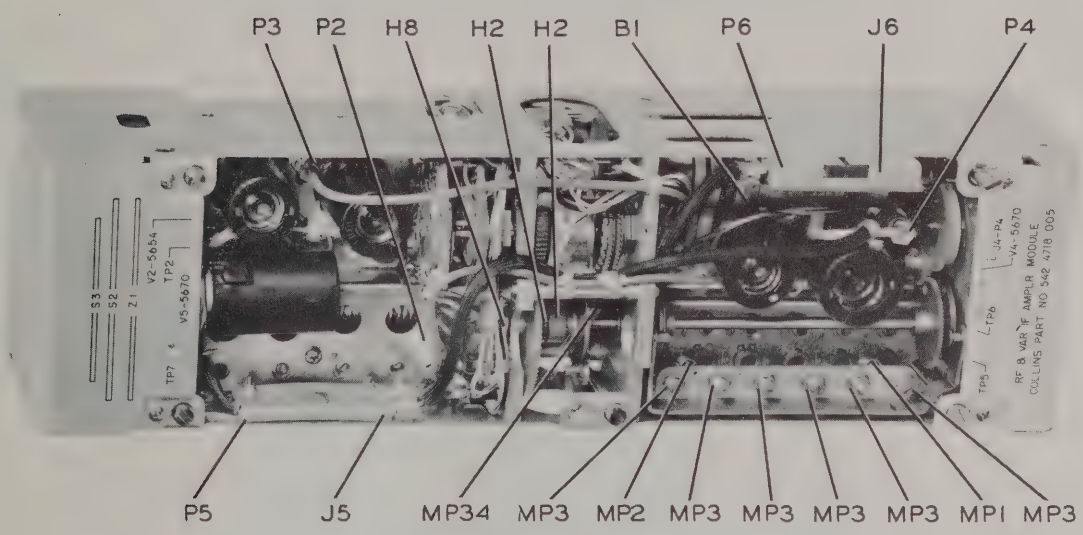

Figure 7-3. R-F and Variable I-F Module, Top

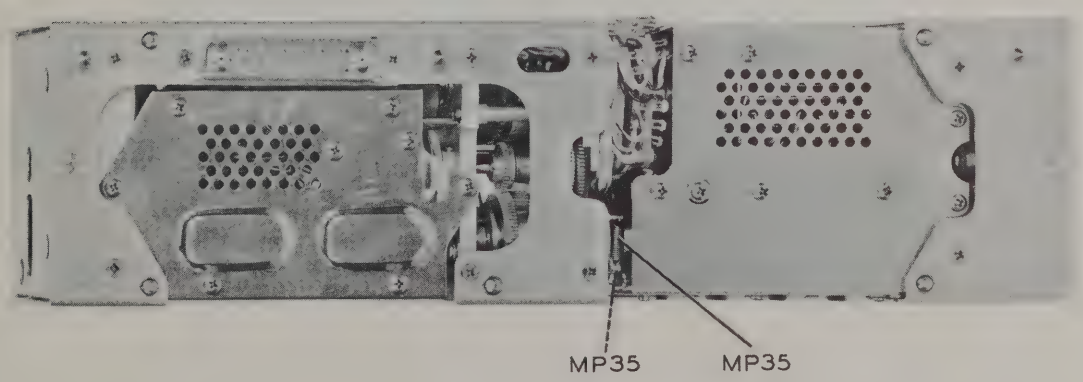

Figure 7-4. R-F and Variable I-F Module, Bottom

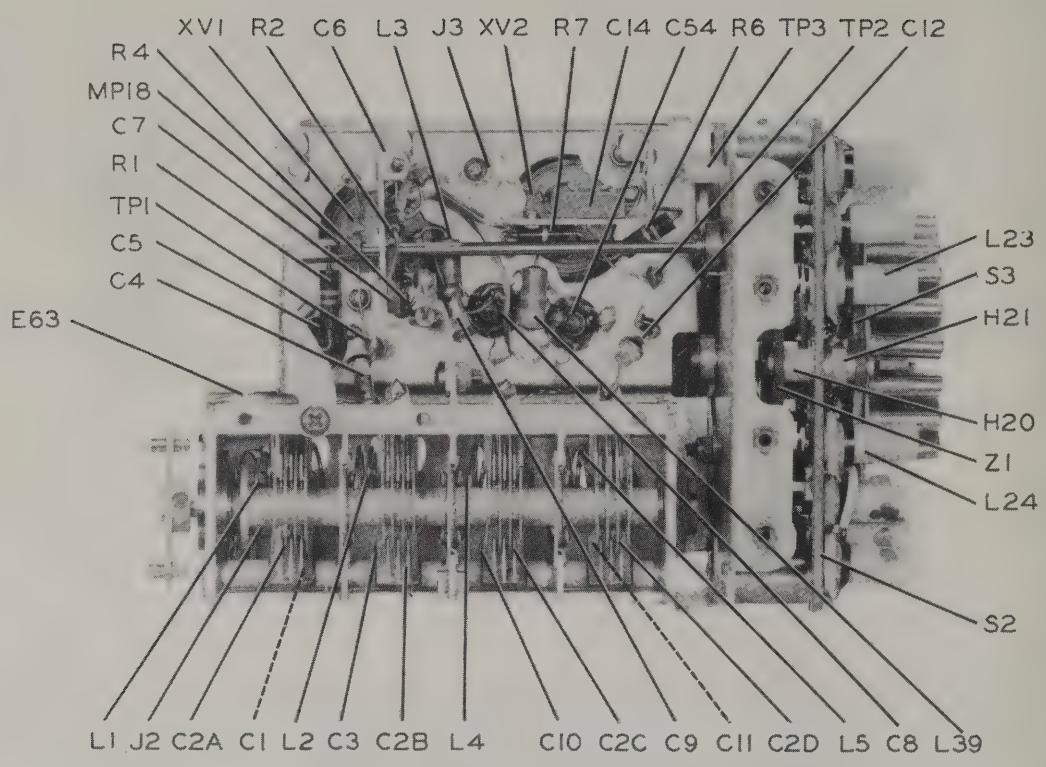

Figure 7-5. R-F Module, Top View

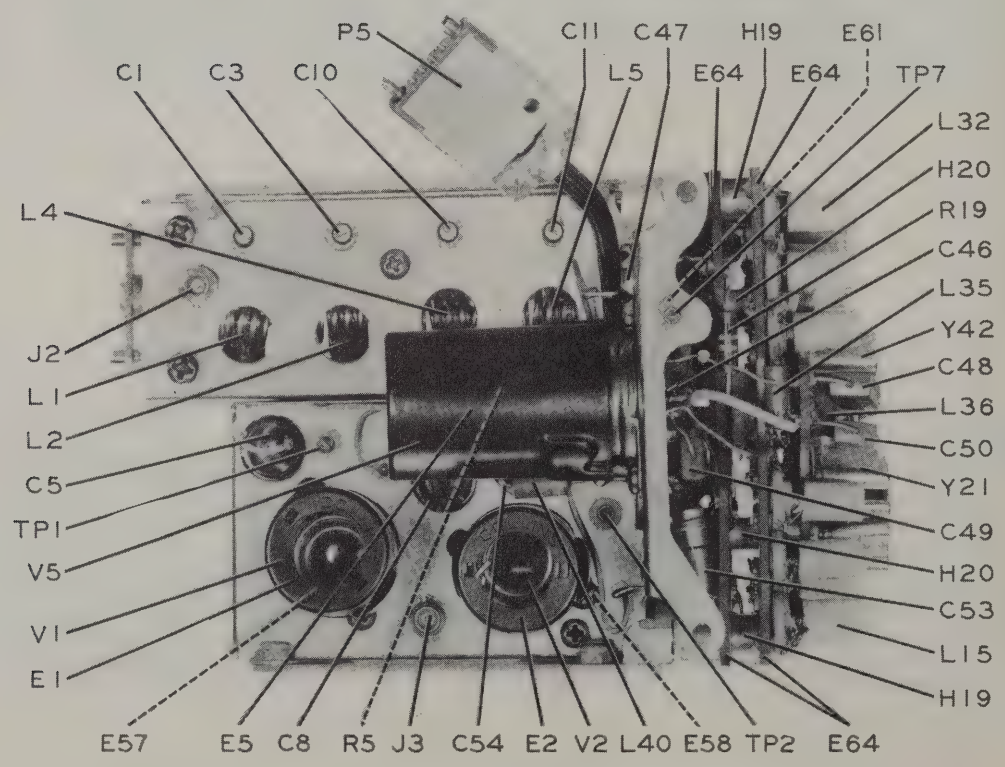

Figure 7-6. R-F Module, Side View

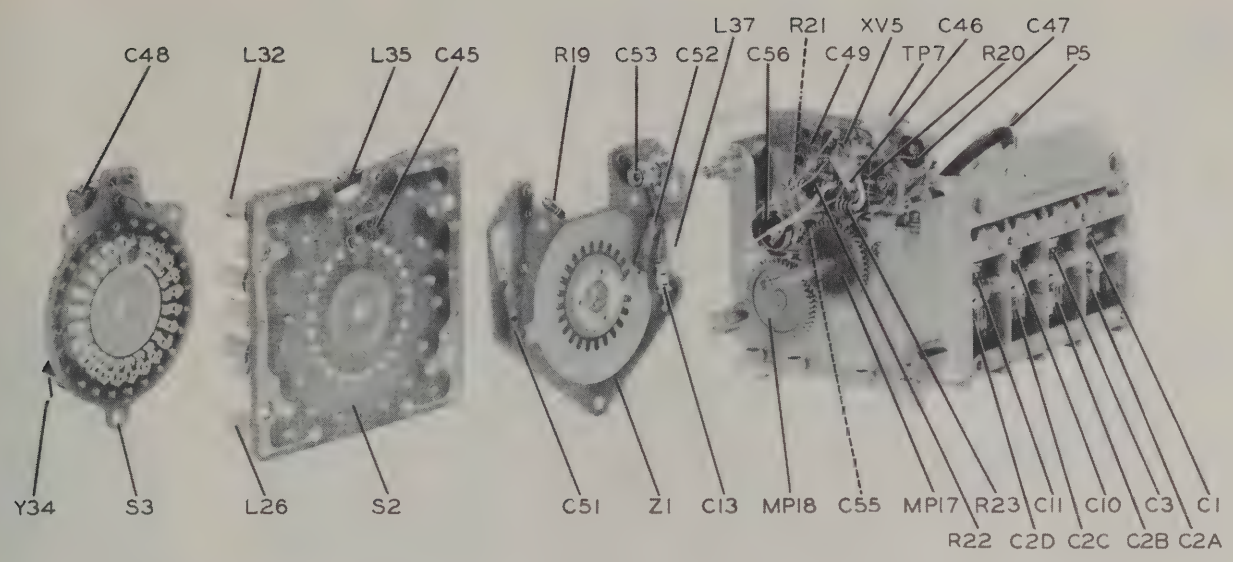

Figure 7-7. R-F Module, Front Exploded

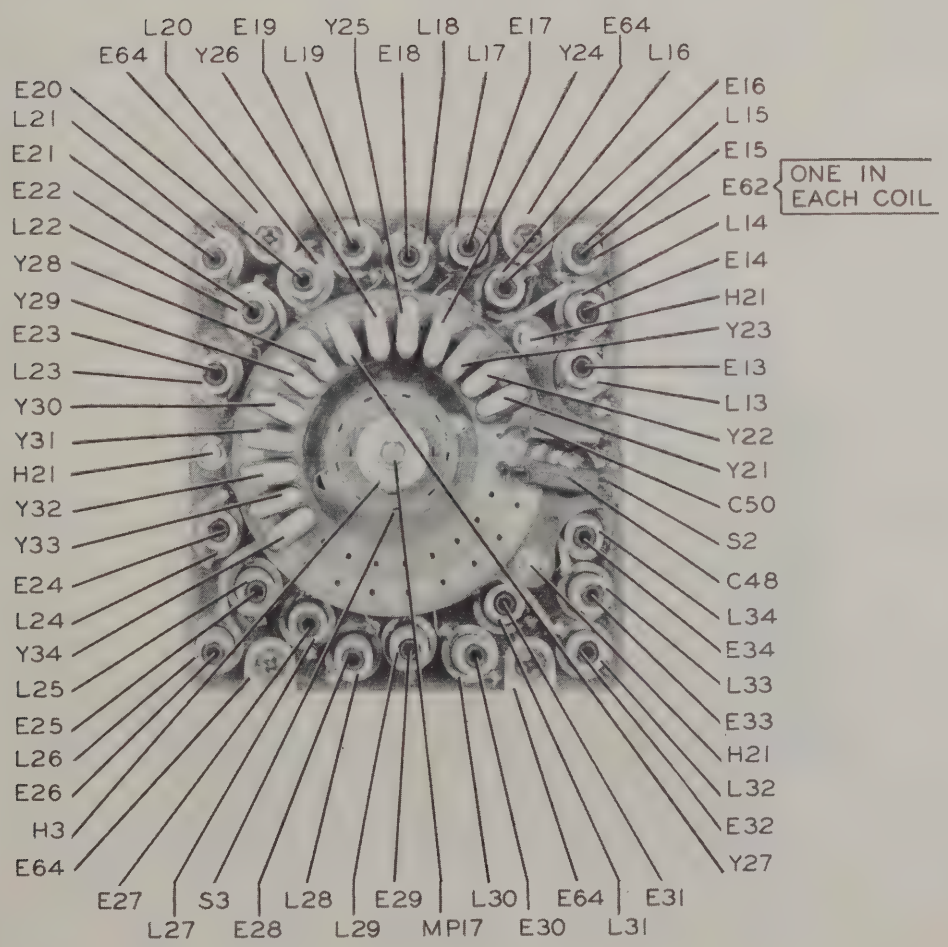

Figure 7-8. First Injection Oscillator Crystal and Coil Positions

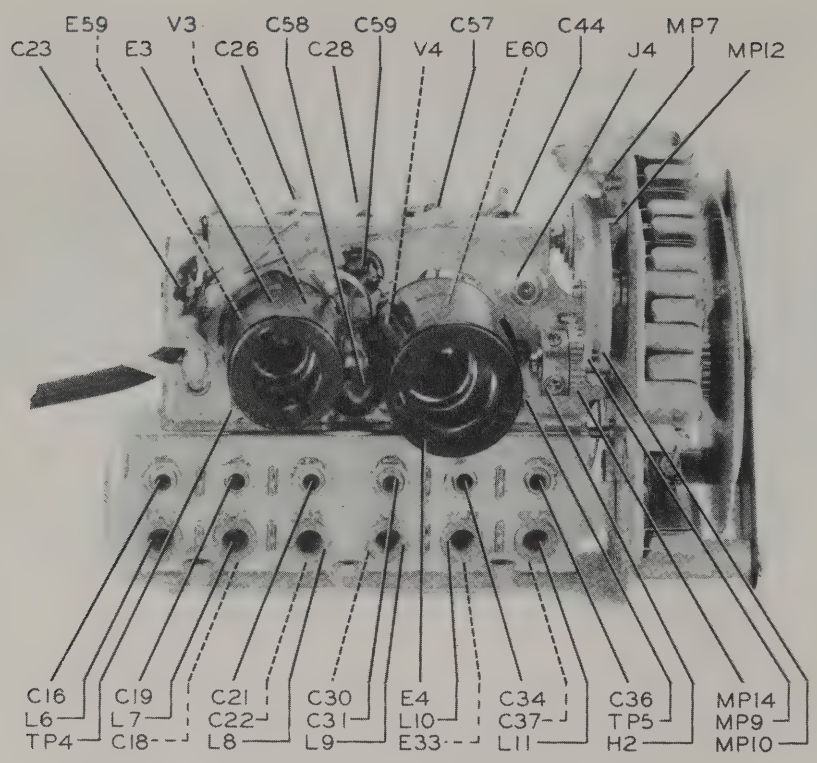

Figure 7-9. Variable I-F Module, Top

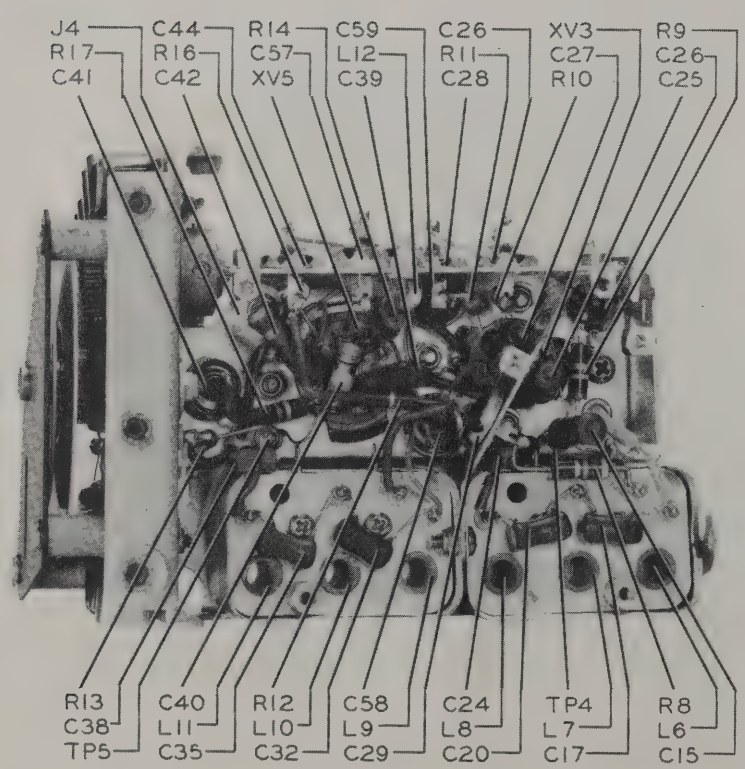

Figure 7-10. Variable I-F Module, Bottom

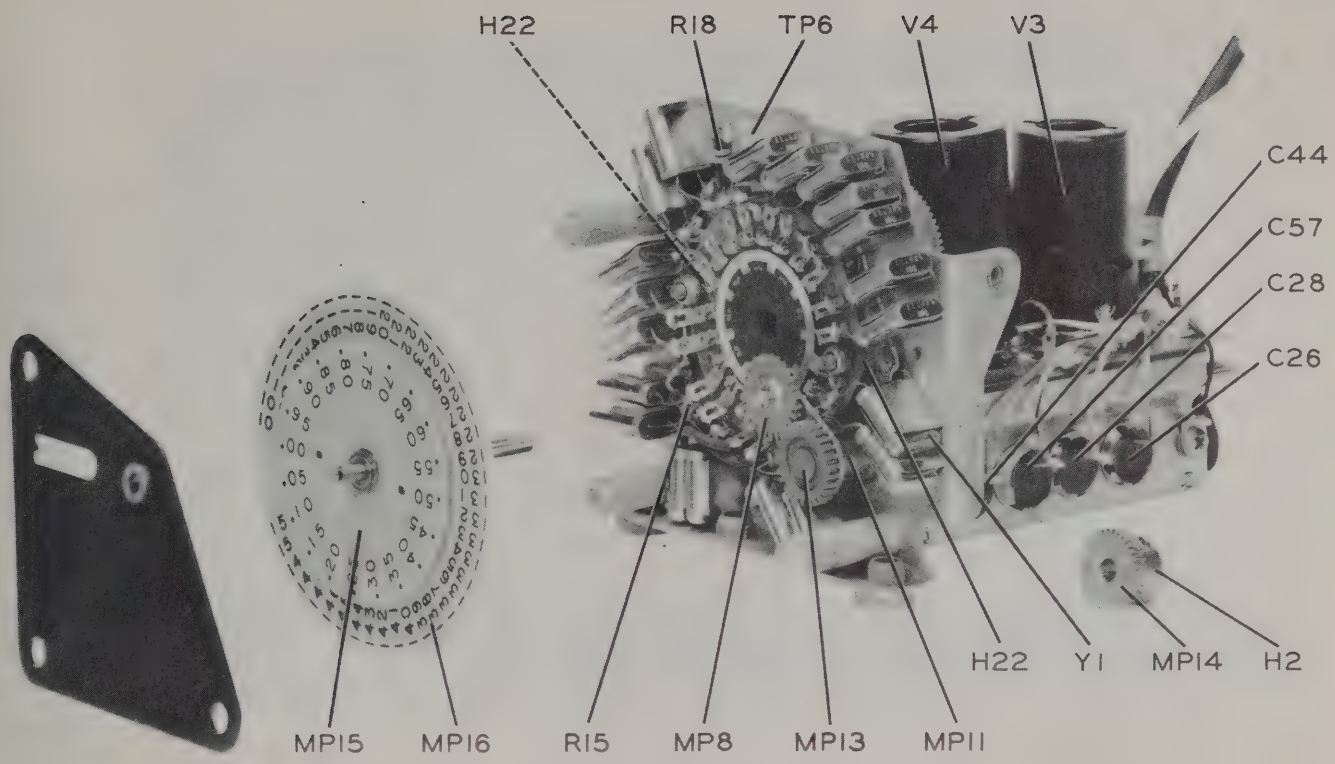

Figure 7-11. Variable I-F Module, Front Exploded

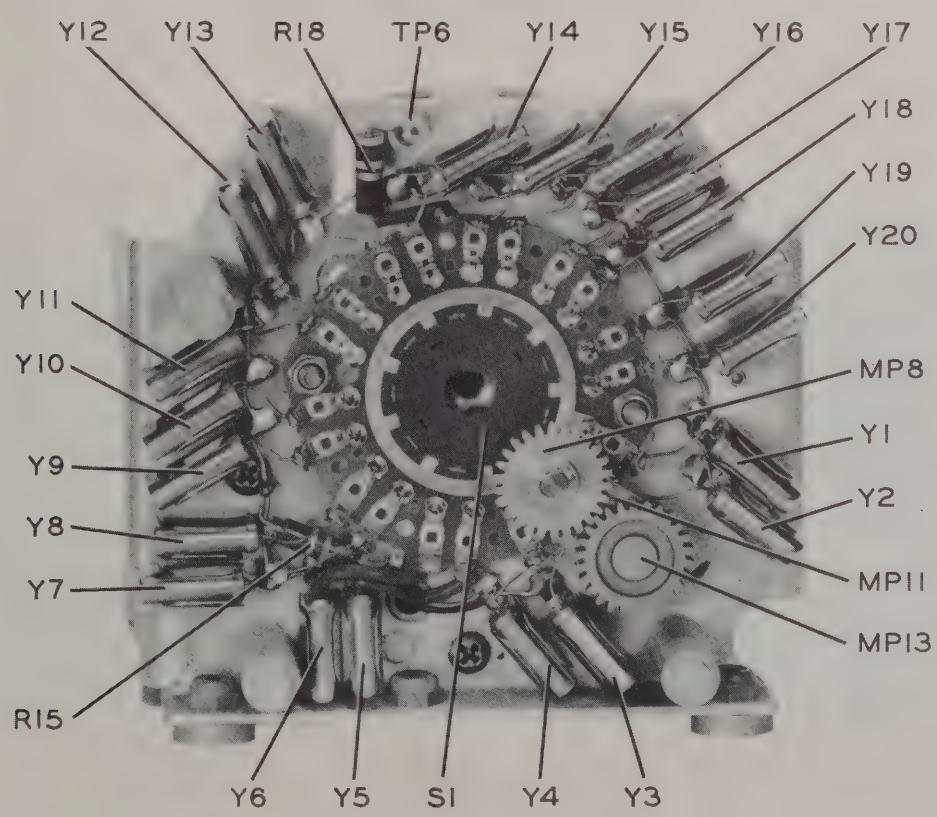

Figure 7-12. Second Injection Oscillator, Crystal Positions

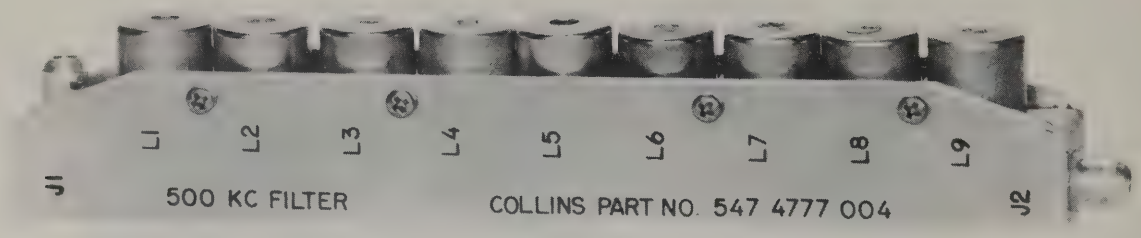

Figure 7-13. 500-Kc Filter, Side

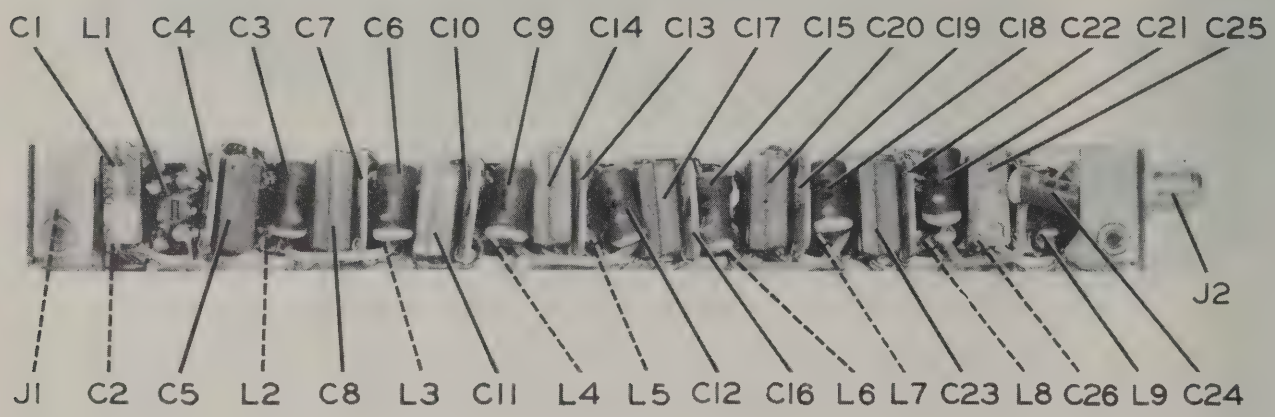

Figure 7-14. 500-Kc Filter, Bottom

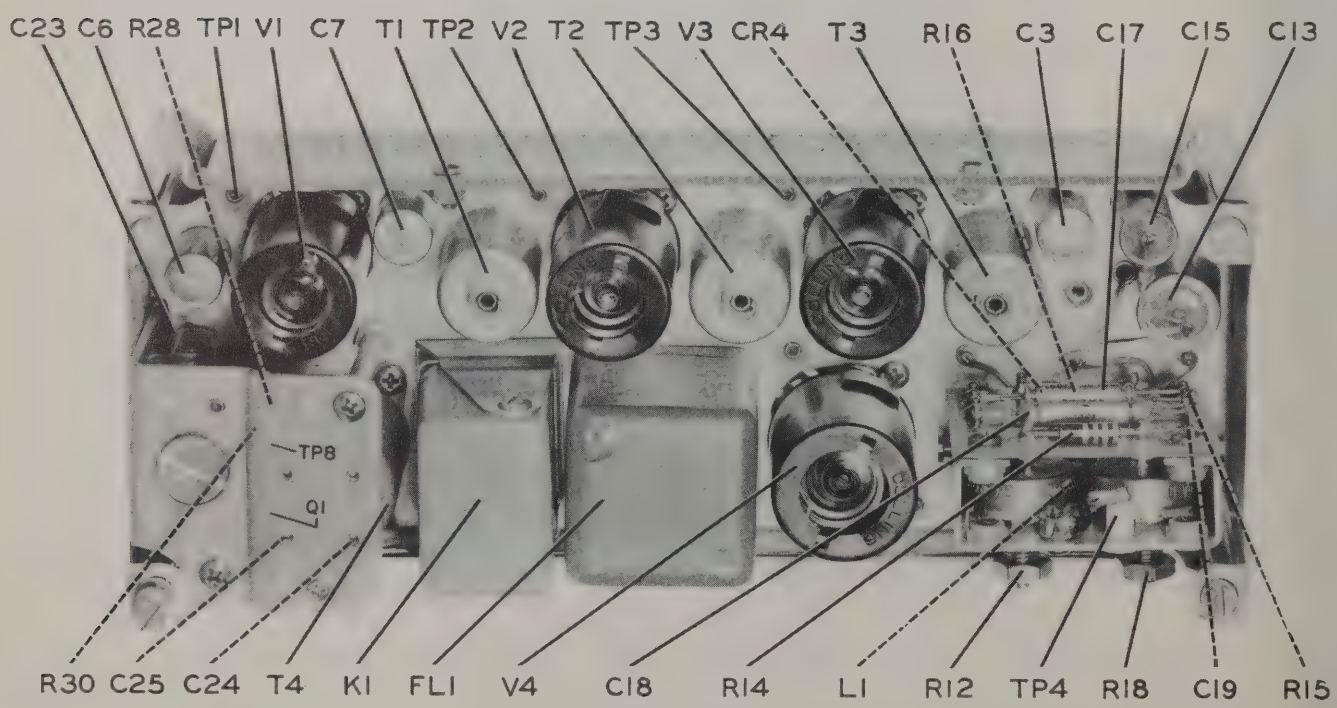

Figure 7-15. I-F and Audio Module, Top

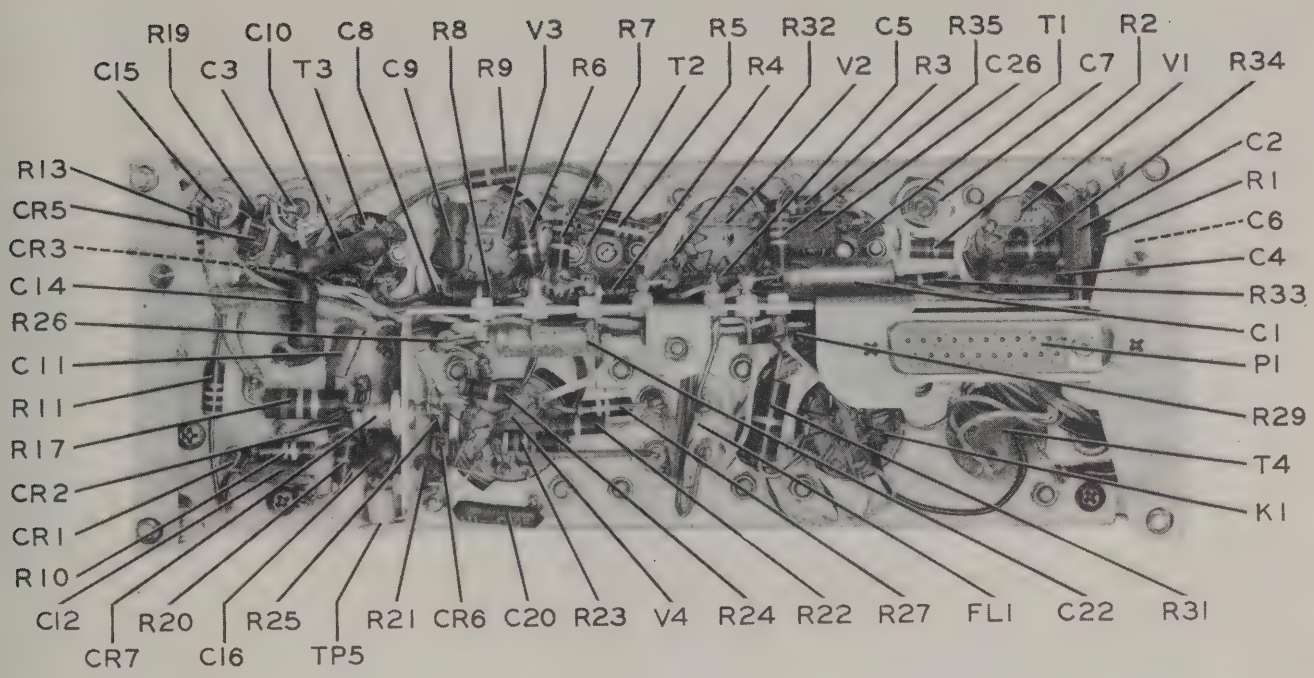

Figure 7-16. I-F and Audio Module, Bottom

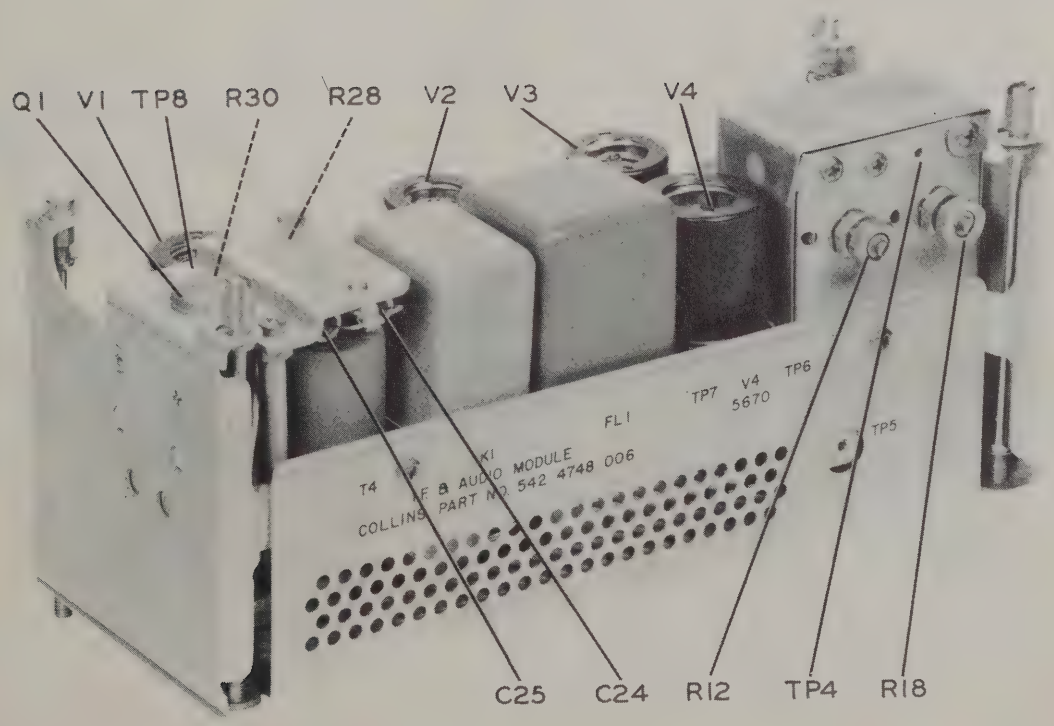

Figure 7-17. I-F and Audio Module, Side

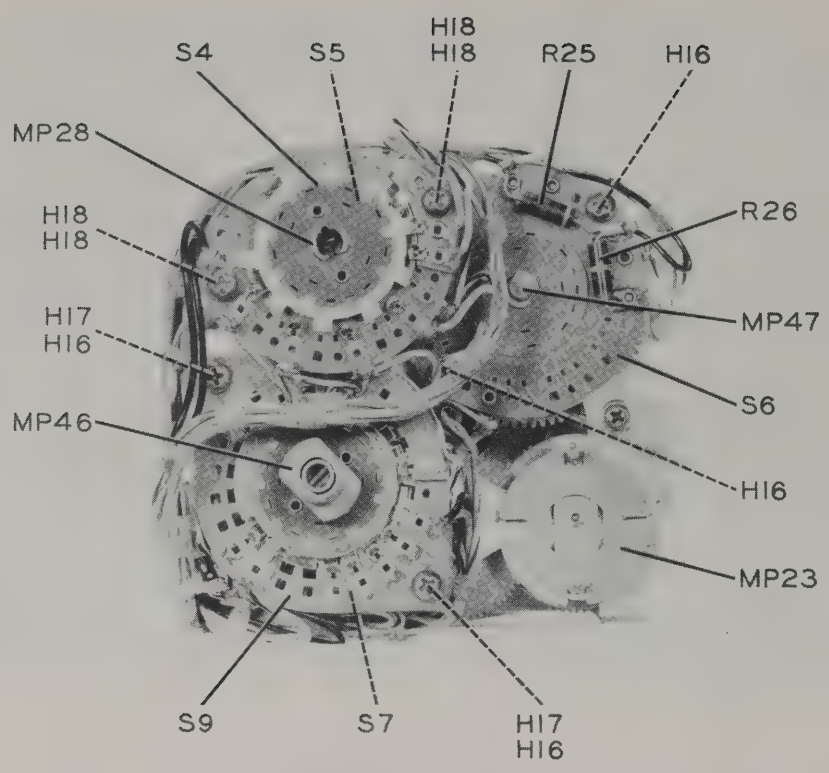

Figure 7-18. Gear Box, Front

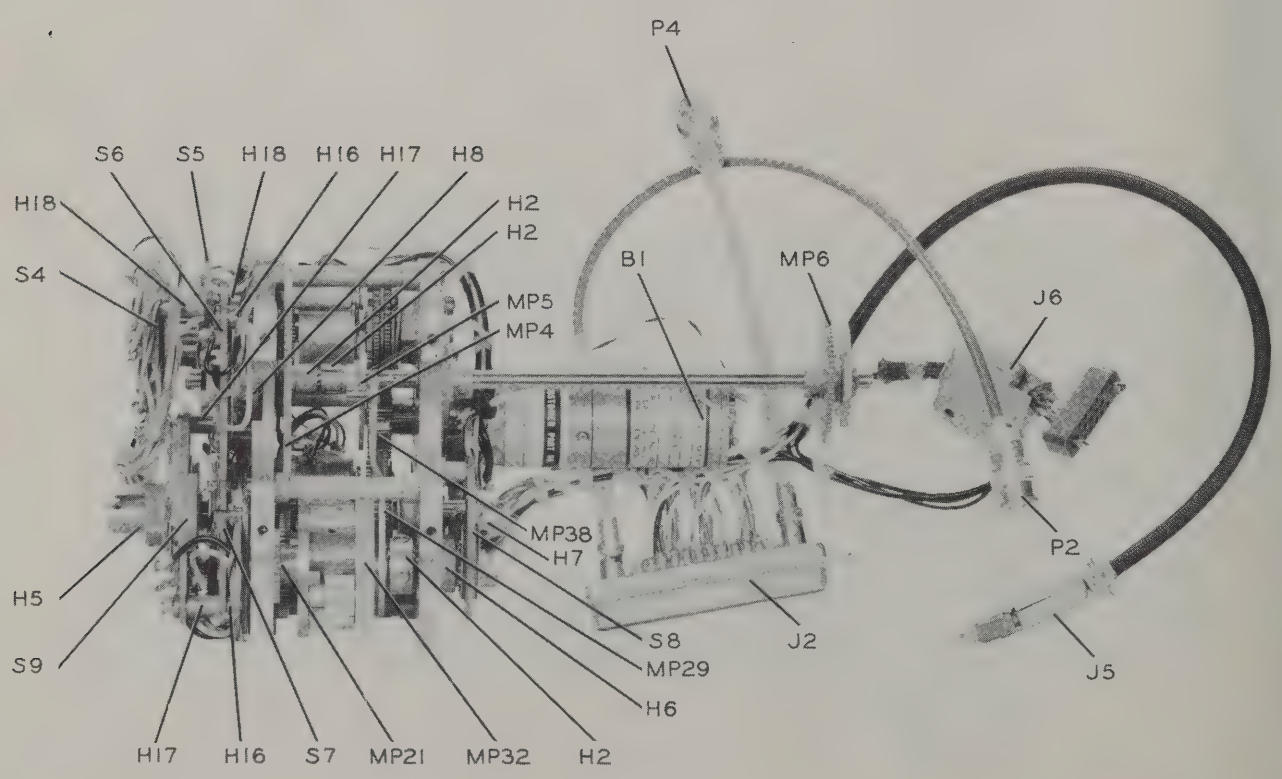

Figure 7-19. Gear Box, Top

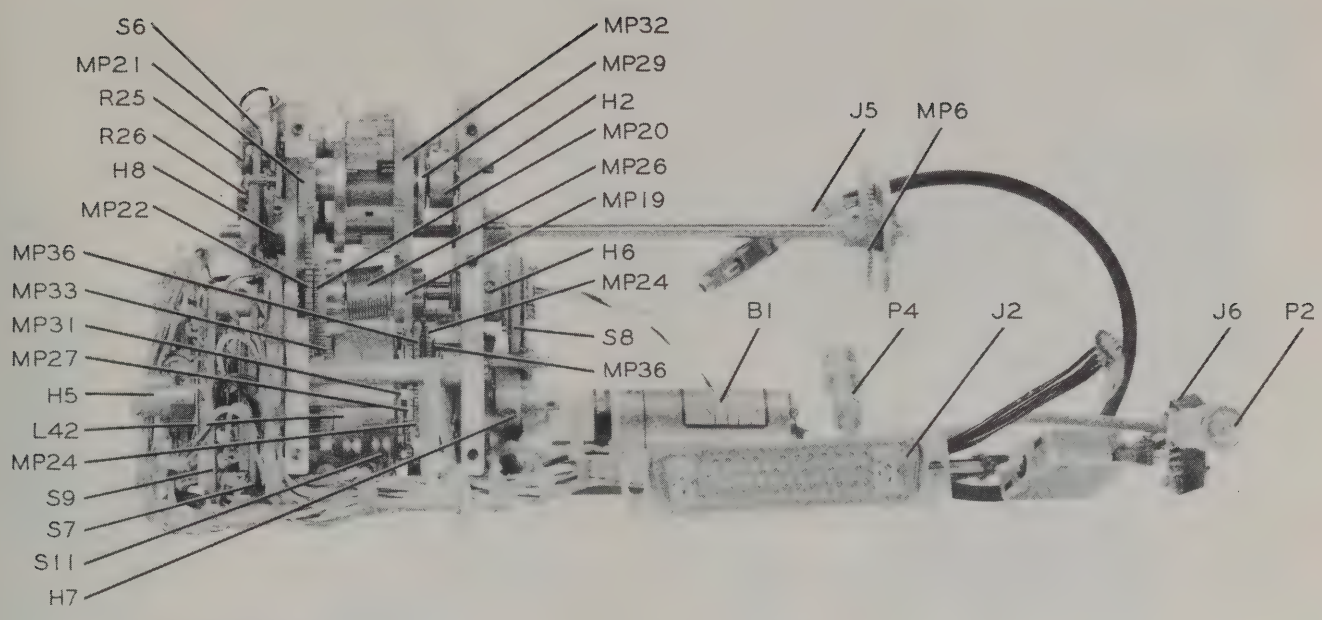

Figure 7-20. Gear Box, Side

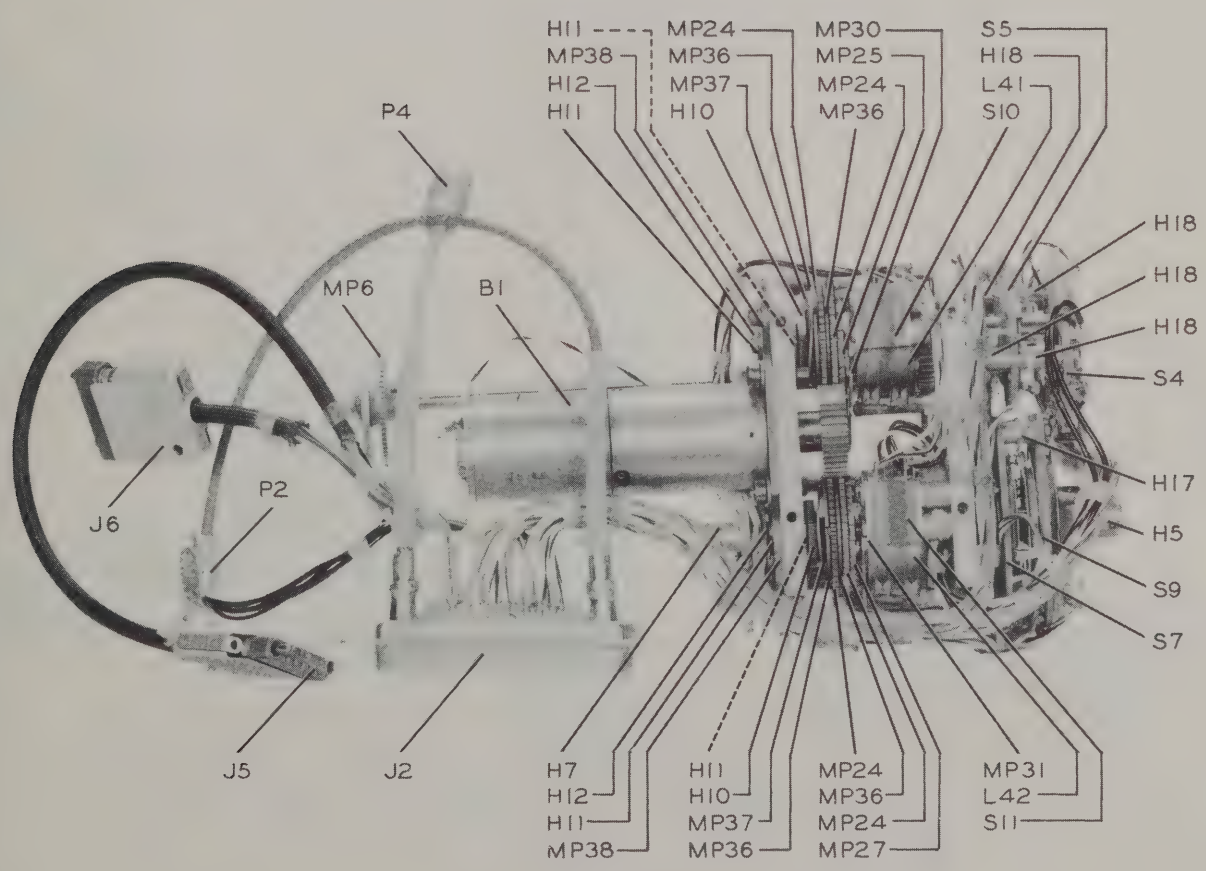

Figure 7-21. Gear Box, Bottom

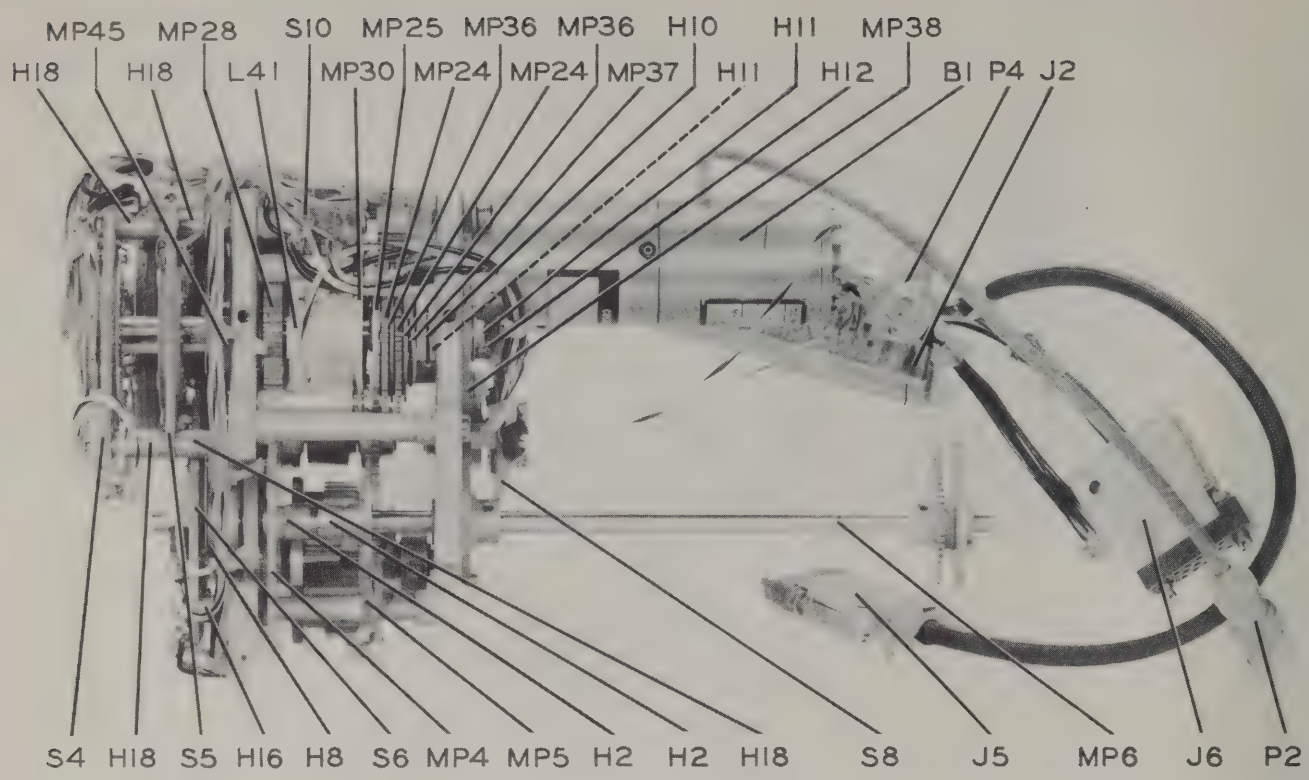

Figure 7-22. Gear Box, Side

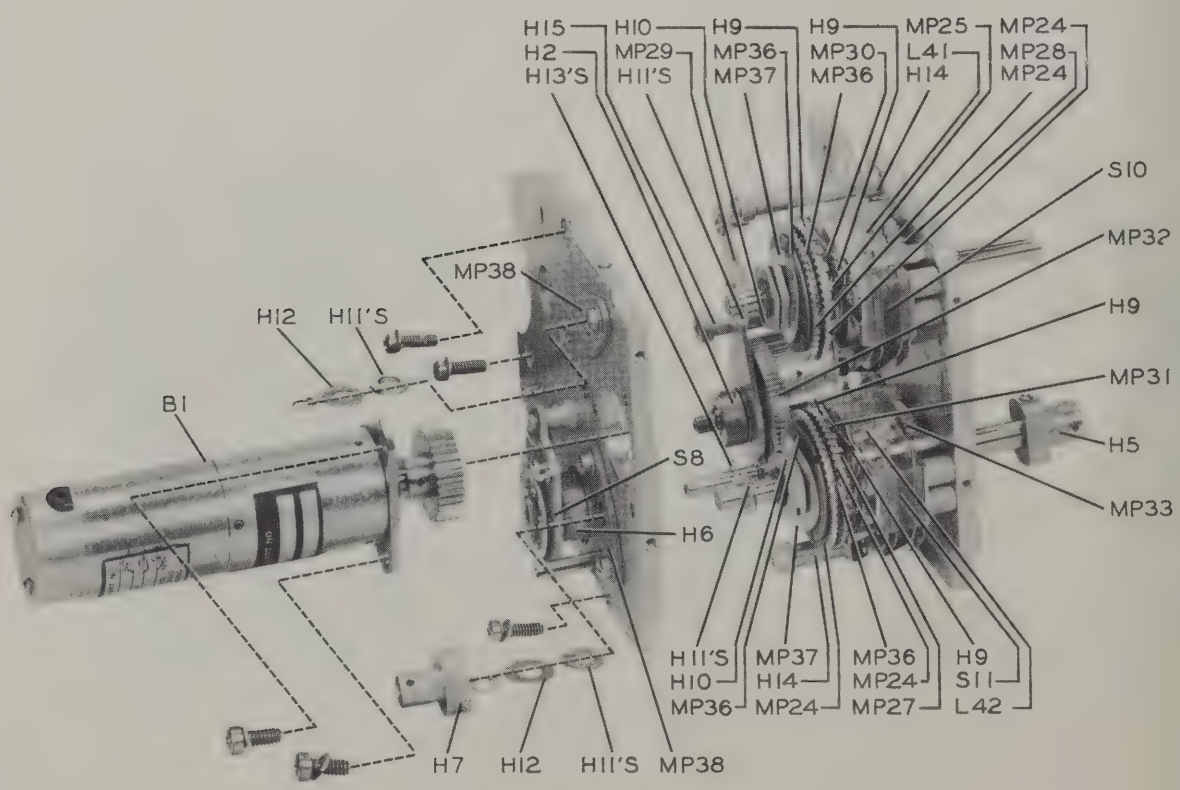

Figure 7-23. Gear Box Exploded, First Step

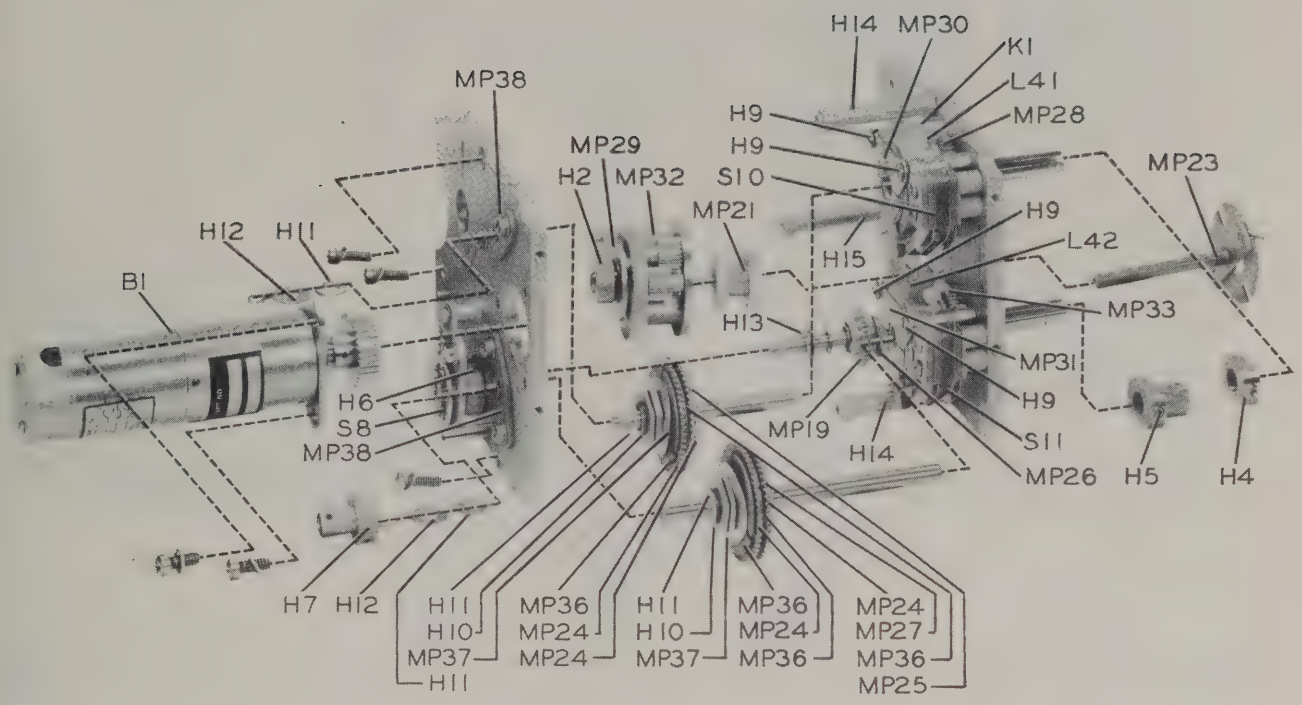

Figure 7-24. Gear Box Exploded, Second Step

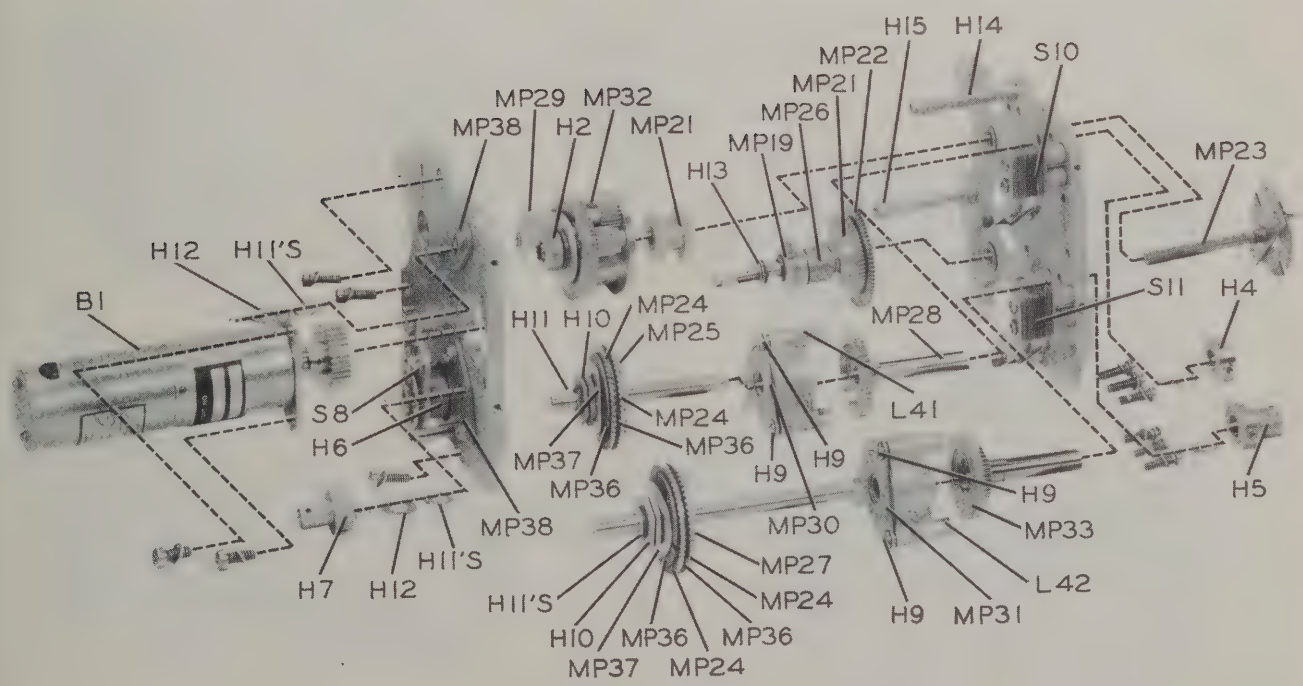

Figure 7-25. Gear Box Exploded, Third Step

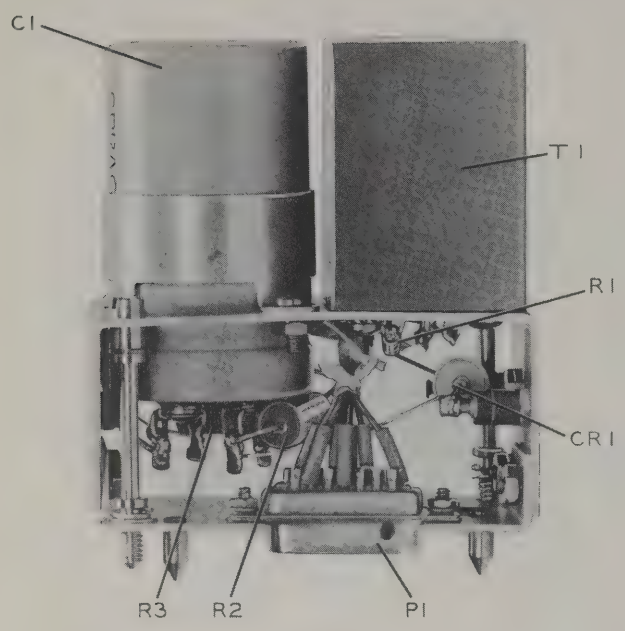

Figure 7-26. A-C Power Supply 516A-1

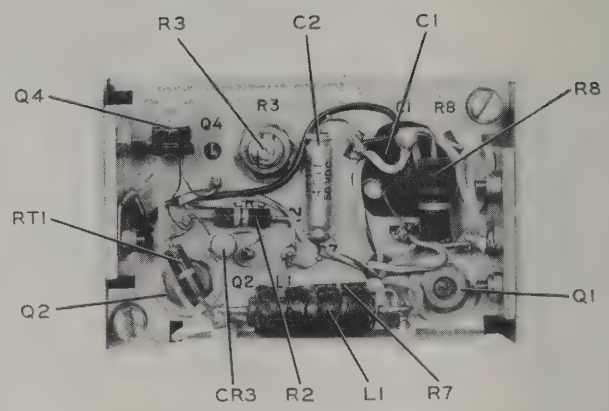

Figure 7-27. D-C Power Supply 516B-3, Top

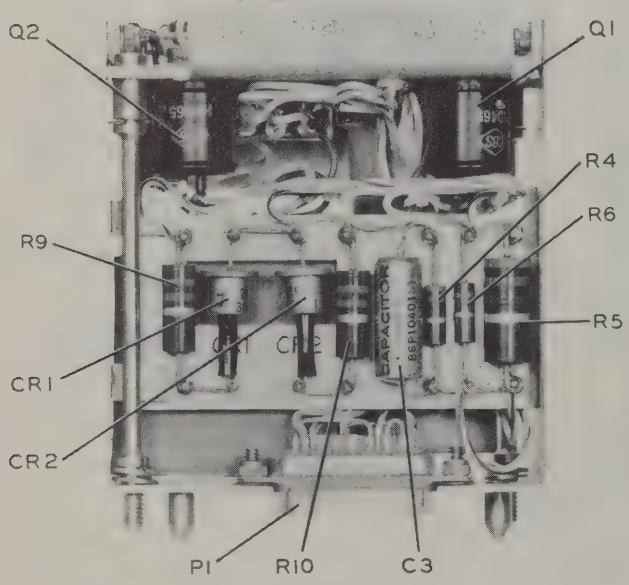

Figure 7-28. D-C Power Supply 516B-3, Side

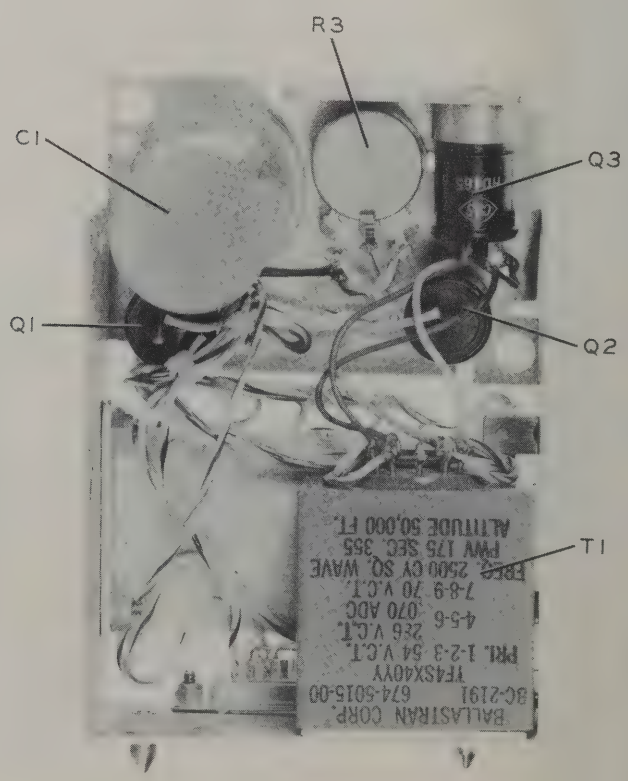

Figure 7-29. D-C Power Supply 516B-3, Side Open

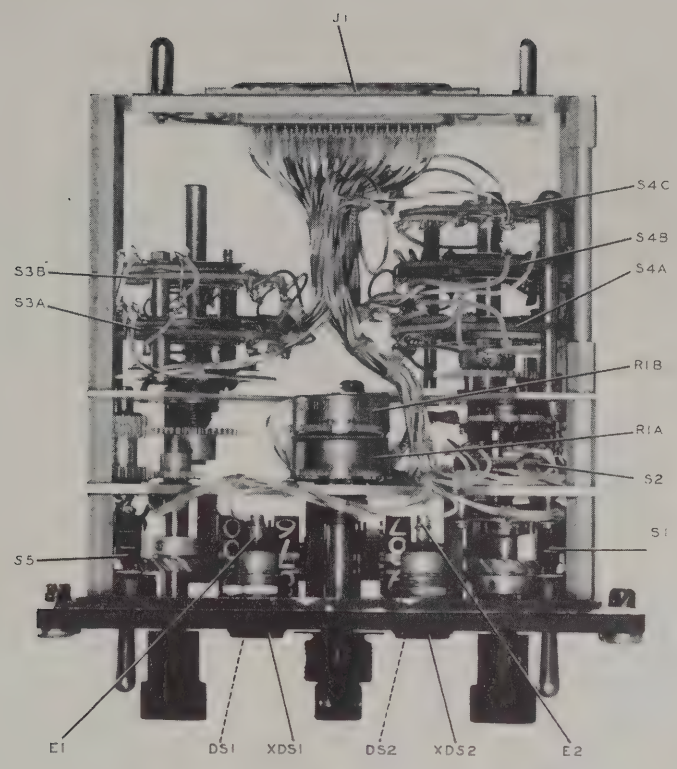

Figure 7-30. Control Unit 614U-1/2, Top Open

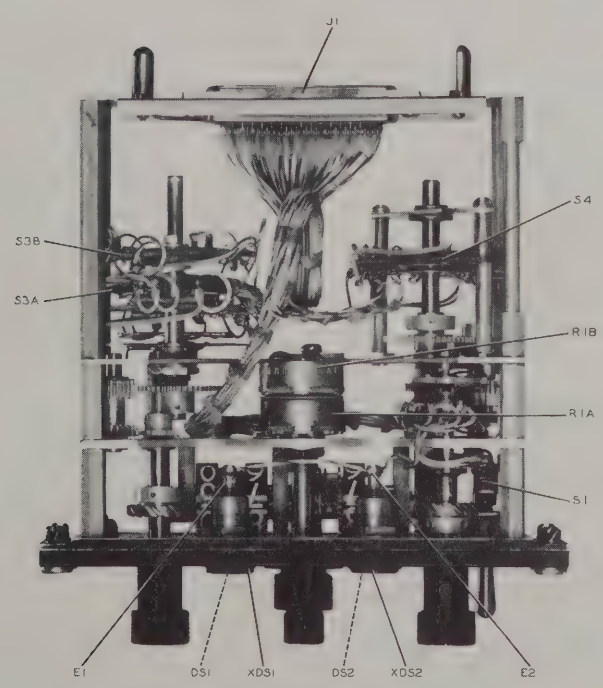

Figure 7-31. Control Unit 614U-3/4, Top Open

Receiver 51X-2

ITEM	DESCRIPTION	COLLINS PART NUMBER
	R-F AND VARIABLE I-F AMPLIFIER, MODULE A1	
B1	MOTOR, TUNING: pinned c/o 1 motor d-c permanent magnet, 27.5 v, 5.5 w max output, intermittent duty cycle, 4 sec on 26 sec off, 127.1:1 planetary gear ration, cw shaft rotation, 7/8 in. dia, 3-3/32 in. max over-all lg to mtg surface	542 4579 002
C1	CAPACITOR, VARIABLE GLASS: 1.0 to 7.5 uuf p/m 10%, 500 vdcw p/o C2	922 0390 00
C2	CAPACITOR, VARIABLE AIR: 4 gang; SLF with 12 uuf fixed parallel capacitance incl capacitor min C; number of plates per section, rotor-4, stator-3; capacity change from 5% rotation, 0 to 11.77 uuf (incl C2, C3, C10, C11)	921 0004 00
C3	CAPACITOR, VARIABLE GLASS: same as C1 (p/o C2)	922 0390 00
C4	CAPACITOR, TUBULAR CERAMIC: 5.0 uuf p/m 1/4 uuf, 500 vdcw	916 0117 00
C5	CAPACITOR, FIXED MICA: 500 uuf p/m 20%, 500 vdcw	912 0667 00
C6	CAPACITOR, FIXED MICA: same as C5	912 0667 00
C7	CAPACITOR, FIXED MICA: same as C5	912 0667 00
C8	CAPACITOR, FIXED MICA: same as C5	912 0667 00
C9	CAPACITOR, TUBULAR CERAMIC: 15.0 uuf p/m 2%, 500 vdcw	916 0210 00
C10	CAPACITOR, VARIABLE GLASS: same as C1 (p/o C2)	922 0390 00
C11	CAPACITOR, VARIABLE GLASS: same as C1 (p/o C2)	922 0390 00
C12	CAPACITOR, TUBULAR CERAMIC: 2.0 uuf p/m 1/4 uuf, 500 vdcw	916 0075 00
C13	CAPACITOR, TUBULAR CERAMIC: 3.0 uuf p/m 1/4 uuf, 500 vdcw	928 0144 00
C14	CAPACITOR, FIXED MICA DIELECTRIC: 68 uuf p/m 2%, 500 vdcw	912 0481 00
C15	CAPACITOR, FIXED CERAMIC: 3000 uuf plus 100% minus 20%, 350 vdcw	913 3339 00
C16	CAPACITOR, VARIABLE GLASS: 0.8 to 8.0 uuf p/m 10%, 1000 vdcw	922 0416 00
C17	CAPACITOR, TUBULAR CERAMIC: 2.0 uuf p/m 1/4 uuf, 500 vdcw	928 0075 00
C18	CAPACITOR, FIXED MICA DIELECTRIC: 100 uuf p/m 2%, 500 vdcw	912 0493 00
C19	CAPACITOR, VARIABLE GLASS: same as C16	922 0416 00
C20	CAPACITOR, TUBULAR CERAMIC: 1.0 uuf ±1/4 uuf, 500 vdcw	928 0070 00
C21	CAPACITOR, VARIABLE GLASS: same as C16	922 0416 00
C22	CAPACITOR, FIXED MICA DIELECTRIC: 91 uuf p/m 2%, 500 vdcw	912 0490 00
C23	CAPACITOR, FIXED MICA: same as C5	912 0667 00
C24	CAPACITOR, FIXED MICA DIELECTRIC: same as C18	912 0493 00
C25	CAPACITOR, FIXED CERAMIC: same as C15	913 3339 00
C26	CAPACITOR, FIXED MICA: 1000 uuf p/m 20%, 500 vdcw	912 3441 00
C27	CAPACITOR, FIXED CERAMIC DIELECTRIC: 2000 uuf plus 100% minus 20%, 350 vdcw	913 3338 00
C28	CAPACITOR, FIXED MICA: 500 uuf p/m 20%, 500 vdcw	912 3440 00
C29	CAPACITOR, FIXED MICA: same as C26	912 0668 00
C30	CAPACITOR, FIXED MICA DIELECTRIC: same as C22	912 0490 00
C31	CAPACITOR, VARIABLE GLASS: same as C16	922 0416 00
C32	CAPACITOR, TUBULAR CERAMIC: same as C20	928 0070 00
C33	CAPACITOR, FIXED MICA DIELECTRIC: same as C18	912 0493 00
C34	CAPACITOR, VARIABLE GLASS: same as C16	922 0416 00
C35	CAPACITOR, TUBULAR CERAMIC: same as C20	928 0070 00
C36	CAPACITOR, VARIABLE GLASS: same as C16	922 0416 00
C37	CAPACITOR, FIXED MICA DIELECTRIC: same as C22	912 0490 00
C38	CAPACITOR, FIXED MICA: same as C18	912 0493 00
C39	CAPACITOR, FIXED MICA DIELECTRIC: 220 uuf p/m 2%, 500 vdcw	912 0517 00
C40	CAPACITOR, TUBULAR CERAMIC: 24 uuf p/m 2%, 500 vdcw	916 4326 00
C41	CAPACITOR, FIXED MICA: 2000 uuf p/m 20%, 500 vdcw	912 0676 00
C42	CAPACITOR, FIXED CERAMIC: same as C15	913 3339 00
C43	NOT USED	
C44	CAPACITOR, FIXED MICA: same as C26	912 3441 00
C45	CAPACITOR, FIXED MICA DIELECTRIC: same as C18	912 0493 00
C46	CAPACITOR, FLAT CERAMIC: 5 uuf p/m 0.5 uuf, 500 vdcw	913 0222 00
C47	CAPACITOR, FIXED MICA: same as C5	912 0667 00
C48	CAPACITOR, FIXED MICA DIELECTRIC: same as C18	912 0493 00
C49	CAPACITOR, FIXED MICA DIELECTRIC: same as C18	912 0493 00
C50	CAPACITOR, FIXED MICA DIELECTRIC: same as C18	912 0493 00
C51	CAPACITOR, FIXED CERAMIC: same as C15	913 3339 00
C52	CAPACITOR, FIXED CERAMIC: same as C15	913 3339 00
C53	CAPACITOR, VARIABLE GLASS: same as C1	922 0390 00
C54	CAPACITOR, FIXED MICA: same as C5	912 0667 00
C55	CAPACITOR, FIXED MICA: same as C5	912 0667 00
C56	CAPACITOR, FIXED MICA: same as C5	912 0667 00
C57	CAPACITOR, FIXED MICA: 2000 uuf p/m 20%, 500 vdcw	912 3442 00
C58	CAPACITOR, FIXED MICA: same as C41	912 0676 00
C59	CAPACITOR, FIXED MICA: same as C5	912 0667 00
E1	SHIELD, ELECTRON TUBE ASSEMBLY: 7 pin small; brass; incl copper insert and hold down spring	541 6550 003
E2	SHIELD, ELECTRON TUBE ASSEMBLY: same as E1	541 6550 003
E3	SHIELD, ELECTRON TUBE ASSEMBLY: same as E1	541 6550 003
E4	SHIELD, ELECTRON TUBE ASSEMBLY: 9 pin small; brass, incl copper insert and hold down spring	541 6553 003
E5	SHIELD, ELECTRON TUBE ASSEMBLY: same as E4	541 6553 003
E6	CORE, TUNING: incl stud, brass, 0.562 in. lg threaded 8-32 NC-2A full length, slot across one end, opposite end drilled to 0.089 in. dia, 11/32 in. d; 1 tuning core, powdered iron core, freq range 10 to 12 mc; 2-1/8 in. lg by 0.195 in. dia overall	542 4555 002
E7	CORE, TUNING: same as E6	542 4555 002
E8	CORE, TUNING: same as E6	542 4555 002
E9	CORE, TUNING: same as E6	542 4555 002
E10	CORE, TUNING: same as E6	542 4555 002
E11	CORE, TUNING: same as E6	542 4555 002
E12	INSULATOR, FEEDTHRU: rd post shape; brass, 0.350 in. lg overall; 0.172 in. OD	306 0324 00
E13 thru E34	CORE, TUNING: threaded powdered iron core; rustproof finish, carbonyl E material; 0.180 in. dia by 5/16 in. lg overall w/ 32 pitch shallow thread	288 2159 00
E35 thru E42	TERMINAL, FEEDTHRU, INSULATED: brass w/ Teflon insulation; 0.172 in. dia by 0.515 in. lg overall	306 0323 00
E43	TERMINAL, FEEDTHRU, INSULATED: same as E35	306 0323 00
E44	INSULATOR, FEEDTHRU: same as E12	306 0324 00
E45	NOT USED	
E46	TERMINAL LUG: phosphor bronze, hot tin dipped; bent soldering lug; 3/16 in. w by 13/32 in. lg overall w/ 0.125 in. dia hole for no. 4 screw	304 0332 00
E47	TERMINAL LUG: same as E46	304 0332 00
E48	TERMINAL LUG: brass, tin dipped, 31/64 in. lg, 5/16 in. w, 0.016 ± w 0.214 and 0.093 holes	304 0196 00
E49	TERMINAL LUG: same as E48	304 0196 00
E50	TERMINAL LUG: same as E48	304 0196 00
E51	TERMINAL LUG: same as E48	304 0196 00
E52	TERMINAL LUG: same as E46	304 0332 00
E53	TERMINAL LUG: same as E46	304 0332 00
E54	TERMINAL LUG: same as E46	304 0332 00
E55	INSULATOR, FEEDTHRU: same as E12	304 0324 00
E56	TERMINAL LUG: phosphor bronze, hot tin, solder coat or electrotinned finish; bent soldering lug; 47/64 in. lg, 5/16 in. w overall	304 0317 00
E57	SLEEVE, TUBE SOCKET: for 7 pin tube; cadmium plated copper; 0.0005 in. by 13/32 in. by 2-5/16 in., 7 tabs bent to 40° angle	541 6532 003
E58	SLEEVE, TUBE SOCKET: same as E57	541 6532 003
E59	SLEEVE, TUBE SOCKET: same as E57	541 6532 003
E60	INSERT, ELECTRON TUBE SOCKET: cadmium plated copper; 0.094 in. OD by 2-25/32 in. lg; 8 tabs bent at 40° angle	541 6533 003
E61	INSERT, ELECTRON TUBE SOCKET: same as E60	541 6533 003
E62	STRIP, COIL: Teflon tape, 5/32 in. w by 5/8 in. lg	542 4626 002
E63	CLIP, GROUNDING: cap frame; beryllium copper; 1 in. wide, 1.040 in. lg approx w/ groove bent thru center 0.040 in. wide by 0.046 in. deep	542 4582 002
E64	CLIP, GROUNDING BOARD: beryllium copper; 0.379 in. lg, 0.342 in. w, 0.068 in. thk w/ two 0.187 in. dia holes one in each side	542 4592 002
H1	SCREW, CAPTIVE: CRES type 303; 3.130 in. lg, 0.234 in. dia head w/ slot 0.051 in. wide by 0.062 in. deep undercut 2.517 in. to 0.109 in. dia, 8-32 NC-2A thread 0.416 in. lg	542 4496 002

Receiver 51X-2

ITEM	DESCRIPTION	COLLINS PART NUMBER
H2	COLLAR: CRES type 303 passivate finish; 0.468 in. OD, 0.250 in. ID, 0.200 in. thk	542 4513 002
H3	COLLAR, SWITCH DRIVE: long; anodized aluminum, 1.125 in. lg overall, 0.234 in. head	542 4571 002
H4	COLLAR, CLAMPING: CRES 0.562 in. OD by 0.375 in. w, 0.250 in. ID by 0.188 in. w, 0.200 in. thk	542 4548 002
H5	COLLAR, PINNED: double D bore; CRES; 0.562 in. OD by 0.375 in. w, 0.250 in. ID by 0.218 in. w, 0.531 in. lg overall	542 4581 002
H6	COLLAR, SWITCH DRIVE: anodized aluminum; 0.500 in. OD, 0.1562 in. ID, 0.468 in. lg overall	542 4604 002
H7	COLLAR, SHAFT DRIVE, PINNED: 0.500 in. OD 0.159 in. ID, 0.546 in. lg overall undercut 0.336 in. to 0.050 in. OD w/ two 6-40 NC-2B holes spaced 90° c to c, one 0.065 in. dia hole in shank, incl 1 retaining pin 1/4 in. lg	542 4611 002
H8	COLLAR, SWITCH DRIVE: anodized aluminum T4 temper; 0.500 in. OD, 0.1562 in. ID, 0.421 in. lg overall undercut 0.187 in. to 0.184 in. OD w/ two 6-40 NF-2B holes at 90° c to c	542 4570 002
H9	SCREW: 303 CRES, slotted head, 0.187 in. dia, 4-40 NC-2A thd	542 4510 002
H10	NUT, SELF-LOCKING: CRES, 1/2 in. across hex, 5/16-32 NEF-2B tap, 0.032 in. slot	542 4524 002
H11	WASHER: shim brass, 0.343 in. OD, 0.191 in. ID, 0.0030 in. thk	542 1589 003
H12	WASHER: CRES, 0.406 in. OD, 0.188 in. ID, 0.012 in. thk	500 2112 002
H13	WASHER: 304 CRES, 0.343 in. OD, 0.158 in. ID, 0.0156 in. thk	542 1588 003
H14	POST, SPACING: aluminum, 4-40 NC-2B to 3/8 min full thd, 0.250 in. OD, 1.218 in. lg	542 4608 002
H15	POST, SPACING: aluminum, 4-40 NC-2B to 5/16 min full thd depth, 0.250 in. OD, 1.218 in. lg	542 4609 002
H16	SPACER: aluminum, 0.116 in. ID, 0.195 in. OD, 7/32 in. lg	542 4689 003
H17	SPACER: aluminum, 0.116 in. ID, 0.195 in. OD, 9/32 in. lg	542 4690 003
H18	SPACER: aluminum, 0.116 in. ID, 0.193 in. OD, 3/8 in. lg	542 4691 003
H19	COLLAR, SPACING: brass 0.312 in. OD, 0.1875 in. ID, 0.187 in. lg	542 4559 002
H20	SPACER: aluminum, 0.116 in. ID, 0.218 in. OD, 0.203 in. lg	542 4498 002
H21	POST, SWITCH MTG: aluminum, 1/4 hex rod, 4-40 NC-2B by 9/64 min full thd, 0.343 in. lg	542 4499 002
H22	SPACER: aluminum, 0.117 in. ID, 0.187 in. OD, 0.125 in. lg	541 5975 002
J1	NOT USED	
J2	CONNECTOR, RECEPTACLE ELECTRICAL: 1 rd male contact, straight shape; 5/16 in. hex by 11/16 in. lg; bayonet latch-type locking	357 9215 00
J3	CONNECTOR, RECEPTACLE ELECTRICAL: same as J2	357 9215 00
J4	CONNECTOR, RECEPTACLE ELECTRICAL: 1 rd male contact, straight shape; 5/16 in. hex by 11/16 in. lg; bayonet latch-type locking	357 9215 00
J5	CONNECTOR, RECEPTACLE ELECTRICAL: 7 contact panel mtg, socket insert, subminiature receptacle connector w/ 1 male and 1 female guide pin; 3 amp current rating; 3/16 in. w by 17/32 in. h by 25/32 in. lg overall	372 1698 00
J6	CONNECTOR, RECEPTACLE ELECTRICAL: 14 contact, panel mtg, socket insert, subminiature receptacle connector w/ 1 male and 1 female guide pin; 3 amp current rating; 1/4 in. w by 17/32 in. h by 7/8 in. lg overall	372 1693 00
K1	C/O L41, S10, MP30	
K2	C/O L42, S11, MP31	
L1	COIL, RADIO FREQUENCY: 4-3/4 turns wound cc; single conductor silver coated solid copper wire 0.0403 in. dia no. 18 AWG	542 4688 003
L2	COIL, RADIO FREQUENCY: same as L1	542 4688 003
L3	CHOKE, RADIO FREQUENCY: single layer wound; enamel or Formvar insulation 1.5 inductance; 800 max ma current; mineral-filled phenolic coil form	240 0063 00
L4	COIL, RADIO FREQUENCY: same as L1	542 4688 003
L5	COIL, RADIO FREQUENCY: same as L1	542 4688 003
L6	COIL, RADIO FREQUENCY: 24 turns single layer wound; single conductor rd double enamel magnet copper wire no. 30 AWG; Formica form	542 4658 003
L7	COIL, RADIO FREQUENCY: same as L6	542 4658 003
L8	COIL, RADIO FREQUENCY: same as L6	542 4658 003
L9	COIL, RADIO FREQUENCY: same as L6	542 4658 003
L10	COIL, RADIO FREQUENCY: same as L6	542 4658 003
L11	COIL, RADIO FREQUENCY: same as L6	542 4658 003
L12	CHOKE, RADIO FREQUENCY: 570 ma current; 0.16 ohm resistance; 12.0 p/m 10% uh; 3/16 in. dia, 3-7/16 in. lg overall	240 0150 00
L13	COIL, RADIO FREQUENCY: 6-1/2 turns close wound, single layer wound; internally threaded steatite coil form; single conductor rd double enamel magnet copper wire 0.0116 in. dia no. 30 AWG	542 4728 003
L14	COIL, RADIO FREQUENCY: same as L13	542 4728 003
L15	COIL, RADIO FREQUENCY: same as L13	542 4728 003
L16	COIL, RADIO FREQUENCY: same as L13	542 4728 003
L17	COIL, RADIO FREQUENCY: same as L13	542 4728 003
L18	COIL, RADIO FREQUENCY: same as L13	542 4728 003
L19	COIL, RADIO FREQUENCY: 5-1/2 turns close wound, single layer wound; internally threaded steatite coil form; single conductor rd double enamel magnet copper wire 0.0116 in. dia no. 30 AWG	542 4727 003
L20	COIL, RADIO FREQUENCY: same as L19	542 4727 003
L21	COIL, RADIO FREQUENCY: same as L19	542 4727 003
L22	COIL, RADIO FREQUENCY: same as L19	542 4727 003
L23	COIL, RADIO FREQUENCY: same as L19	542 4727 003
L24	COIL, RADIO FREQUENCY: same as L19	542 4727 003
L25	COIL, RADIO FREQUENCY: 4-1/2 turns close wound, single layer wound; internally threaded steatite coil form; single conductor rd double enamel magnet copper wire 0.0116 in. dia no. 30 AWG	542 4726 003
L26	COIL, RADIO FREQUENCY: same as L25	542 4726 003
L27	COIL, RADIO FREQUENCY: same as L25	542 4726 003
L28	COIL, RADIO FREQUENCY: same as L25	542 4726 003
L29	COIL, RADIO FREQUENCY: same as L25	542 4726 003
L30	COIL, RADIO FREQUENCY: same as L25	542 4726 003
L31	COIL, RADIO FREQUENCY: same as L25	542 4726 003
L32	COIL, RADIO FREQUENCY: same as L25	542 4726 003
L33	COIL, RADIO FREQUENCY: same as L25	542 4726 003
L34	COIL, RADIO FREQUENCY: same as L25	542 4726 003
L35	COIL, RADIO FREQUENCY: single layer wound solenoid, enamel or Formvar copper magnet wire, 0.22 uh, 0.04 ohm, 2000 ma	240 0067 00
L36	COIL, RADIO FREQUENCY: 1.470 ma current rating; 0.68 uh p/m 20%; 0.15 d-c resistance ohm; 7/16 in. lg by 3/16 in. OD; 2 wire leads	240 0061 00
L37	COIL, RADIO FREQUENCY: 5-1/2 turns single layer wound; silver coated single conductor solid copper magnet wire no. 20 AWG	542 4804 003
L38	NOT USED	
L39	COIL, RADIO FREQUENCY: 1 winding, single layer wound; enamel or Formvar magnet wire; 3.30 uh p/m 10% at 7.9 mc inductance; 0.15 ohm d-c resistance; 1.470 ma current rating	240 0065 00
L40	COIL, RADIO FREQUENCY: same as L39	240 0065 00
L41	SHELL ASSEMBLY, SOLENOID: c/o solenoid shell, carbon steel; 1.000 in. OD, 0.718 in. ID, 0.500 in. thk w/ three 0.093 in. radius, grooves and 1 post of carbon steel 0.718 in. lg, 0.187 in. dia; 1 winding solenoid w/ carbon steel core, and two terminal lugs (part of K1)	542 4614 002
L42	SHELL ASSEMBLY, SOLENOID: same as L41 (part of K2)	542 4614 002
MP1	SPRING, EXTENSION: CRES wire, spring temper, 0.0180 in. dia wire, 0.178 in. OD, 15-1/2 coils, 17/32 in. free length; 90° loops on center; to support 6 oz min. at 0.687 ext	542 4823 002
MP2	SPRING, EXTENSION: same as MP1	542 4823 002
MP3	SPRING, LOCKING: stainless steel wire, 0.030 in. dia, "C" shape; 0.030 in. by 0.224 in. by 0.310 in.	502 6005 002
MP4	GEAR: anodized aluminum; 84 teeth	542 4566 002
MP5	CAM, SOLDERED: incl cam, CRES; 0.050 in. thk, 0.2500 in. ID chamfer 0.010 by 45° both sides, 0.625 in. basic OD; and 1 hub CRES 0.328 in. lg, 0.312 in. OD, 0.1562 in. ID before slotting, w/ 4 slots 0.032 in. wd, 0.119 in. deep equally spaced at 90° in one end	542 4569 002
MP6	SHAFT-CAM, PINNED: c/o 1 cam rear, CRES 0.0625 in. thk, 0.3125 in. ID 0.750 in. basic OD; and hub CRES, 0.281 in. lg, 0.312 in. OD, 0.1562 in. ID; 1 cam front, CRES, 0.0625 in. thk, 0.3125 in. ID 0.750 in. basic OD; and gear, 68 teeth, 1 shaft CRES, 5.843 in. lg, 0.1556 in. OD; and 2 pins, 5/16 in. lg	542 4673 003
MP7	SPRING, TENSION: helical, music wire, cadmium pl; 5/16 in. free lg, 5/8 in. working lg, 5/32 in. OD, 9/64 in. ID, open loop ends, rh close wound	340 2090 00
MP8	GEAR, IDLER: aluminum anodized; 26 teeth	542 4537 002

Receiver 51X-2

ITEM	DESCRIPTION	COLLINS PART NUMBER
MP9	GEAR: aluminum anodized; 68 teeth	542 4561 002
MP10	CAM-DIAL ACTUATING, PINNED: cam, nylon; 0.156 in. thk, 0.2500 in. ID w/ 0.020 in. by 45° chamfer one end, 0.473 in. radius on 176° and 0.531 in. radius on rest of cam, one 0.0635 in. dia hole for pinning; incl 1 pin 0.062 in. dia, 1/4 in. lg	542 4562 002
MP11	ARM-IDLER, ROLLED: c/o 1 shaft idler, CRES, 0.1246 in. dia undercut 0.078 in. to 0.0945 in. dia, 0.243 in. lg, 0.065 in. dia hole bored 0.062 in. deep in one end; 1 idler arm CRES, 0.0375 in. thk, 0.500 in. wd, 0.9338 in. lg w/ 0.3125 in. dia hole and 0.0937 in. dia hole 0.5438 in. c to c and hub CRES, 0.850 in. lg, 0.3745 in. OD, 0.2500 in. ID; and 1 bearing w/ 5/32 bore	542 4628 002
MP12	ARM-CAM, DIAL DRIVE, RIVETED: c/o 1 arm-cam CRES, 0.375 in. thk, 0.624 in. w, 1.718 in. lg w/ 0.4375 in. dia hole and 0.064 in. dia hole spaced 1.281 in. c to c incl hub CRES, 0.265 in. thk, 0.3750 in. ID, 0.625 in. OD undercut 0.055 in. to 0.4370 in. OD, 2 holes tapped 6-40 NC-2B and 2 holes 0.065 in. dia at 90° on side; and 2 retaining pins 3/16 in. lg	542 4631 002
MP13	SHAFT-DIAL DRIVE, SOLDERED: incl shaft CRES, 3.857 in. lg, 0.1556 in. dia, 0.406 in. lg w/ 0.066 in. w slot 0.343 in. deep, undercut to 0.093 in. dia; and gear, CRES, 26 teeth	542 4634 002
MP14	GEAR: aluminum, anodized; 34 teeth, w/ 4 slots 0.032 in. w, 0.219 in. deep equally spaced at 90°	542 4556 002
MP15	DIAL, STAKED: c/o 1 shaft-drive CRES, 1.639 in. lg, 0.375 in. dia overall; 1 dial 50 mc, 22 ga aluminum 1.750 in. OD, 0.2812 in. ID	542 4644 003
MP16	DIAL-2 MC, STAKED: incl 1 gear aluminum anodized, 26 teeth, 1 dial 2.437 in. OD, 0.3750 in. ID	542 4646 003
MP17	SHAFT-SWITCH, DRIVE, SOLDERED: incl 1 shaft CRES, 1.547 in. lg, 0.218 in. dia overall, 1 gear CRES, 45 teeth	542 4574 002
MP18	SHAFT-DRIVE, 1st OSC. SOLDERED: incl 1 shaft CRES, 3.032 in. lg overall 0.1556 in. dia 0.406 in. lg w/ slot 0.066 in. w, 0.343 in. d; 1 gear CRES, 45 teeth	542 4577 002
MP19	GEAR, PRESSED: incl 1 bearing, fourteen 0.0446 in. dia trunnion type rollers, open end, for 5/32 in. shaft dia, 9/32 in. OD, 1/4 in. lg; and 1 gear aluminum anodized, 38 teeth	542 4517 002
MP20	GEAR, PRESSED: incl 1 bearing, open end, fourteen 0.0446 in. dia trunnion type rollers, for 5/32 in. shaft dia, 9/32 in. OD, 1/4 in. lg; and 1 gear aluminum, anodized, 57 teeth	542 4519 002
MP21	GEAR, DIFFERENTIAL INPUT: incl 1 bearing sleeve, porous bronze, 0.1565 in. ID, 0.2545 in. OD, 0.468 in. lg; and 1 gear blank aluminum, anodized, 0.635 in. OD, 0.250 in. ID, 0.468 in. thk, 38 teeth	542 4521 002
MP22	GEAR, SOLDERED: c/o 1 shaft CRES, 2.015 in. lg 0.1564 in. dia overall; 1 blank gear 0.1250 in. ID, 1.228 in. OD, 0.088 in. thk overall, hob to diametral pitch 64, pressure angle 20°, teeth 76, std pitch dia 1.1875	542 4532 002
MP23	SHAFT-DIFF, OUTPUT, ROLLED: c/o 1 shaft diff. CRES, 1.658 in. lg, 0.1556 in. dia w/ spider drive, 0.050 in. thk, 0.312 in. w, 1.125 in. lg w/ 1 hole 0.1250 in. dia, 2 holes 0.0625 in. dia spaced 0.437 in. c to c; 1 disk-floating coupling, 0.0375 in. thk, 1.062 in. OD, 0.437 in. ID, 4 slots 0.1250 in. w, 0.217 in. d; 2 pins 0.316 in. lg approx, 0.156 in. OD overall	542 4547 002
MP24	GEAR, CLUTCH: incl 1 gear clutch w/ beryllium copper core, 52 teeth, 1 bearing sleeve, porous bronze, 0.4385 in. OD, 0.3125 in. ID, 0.050 in. thk	542 4560 002
MP25	SHAFT, AUTOPOSITIONER, PINNED: c/o 1 shaft CRES, 2.031 in. lg, 0.1872 in. dia, 1 stop wheel type CRES, 20 position, 1.000 in. OD, 0.3125 in. ID, 0.250 in. w, 0.046 in. thk w/ hub clutch CRES, 0.509 in. lg, 0.375 in. dia overall, 5/16-32 UNEF-2A, 3/16 min full thread one end; and 2 retaining pins	542 4584 002
MP26	SPRING, TORSION: CRES spring wire, 0.025 in. wire dia, 0.375 in. ID, 12-1/2 coils, cw winding direction	542 4613 002
MP27	SHAFT-AUTOPOSITIONER, 2 MC, PINNED: c/o 1 shaft CRES, 2.947 in. lg, 0.1872 in. dia overall; 1 stop wheel CRES, 1.000 in. OD, 0.046 in. thk, center hole 0.250 in. w, 0.3125 in. dia w/ 24 slots equally spaced 0.078 in. apart and hub-clutch CRES type 440CF, 0.509 in. lg, 0.375 in. dia overall 5/16-32 UNEF-2A 3/16 min full thread one end; 1 retaining pin	542 4621 002
MP28	GEAR: CRES type 303, 42 teeth	542 4622 002
MP29	GEAR-50 KC DIFF INPUT, ROLLED: c/o 1 gear 38 teeth, 1 follower cam CRES type 303, 0.296 in. lg, 0.250 in. OD, bored 0.078 in. deep to 0.120 in. ID, 1 arm cam H-34 aluminum 2.124 in. lg, 0.812 in. w overall	542 4625 002
MP30	ARMATURE-SOLENOID, RIVETED: c/o 1 armature cadmium pl carbon steel, 0.750 in. OD, 0.218 in. ID, 0.0650 in. thk; 1 pawl chrome pl beryllium copper, 0.656 in. w, 0.718 in. h, 0.031 in. thk approx overall; 1 hinge chrome pl carbon steel, 1.118 in. lg, 0.0310 in. thk and 6 rivets cadmium pl carbon steel 1/16 in. dia shank 0.125 in. lg (part of K1)	542 4651 003
MP31	ARMATURE-SOLENOID, RIVETED: same as MP30 (part of K2)	542 4651 003
MP32	FRAME ASSY-DIFF: c/o 4 shaft pinion CRES type 303, 0.625 in. lg, 3/32 in. dia; 1 CRES type 303 hub 0.806 in. lg, 0.3760 in. dia overall w/ 4 slots in one end 0.032 in. w equally spaced at 90° and 0.220 in. deep; 4 pinion T4 aluminum, diametral pitch 64, pressure angle 20°, 19 teeth, std pitch dia 0.2969, 0.0924 in. ID, 1 frame-diff, T4 aluminum diametral pitch 64, pressure angle 20°, teeth 76, std pitch dia 1.1875, 0.3750 in. ID and 2 rollpins 5/16 in. dia	542 4660 003
MP33	GEAR-2MC, DRIVE: c/o 1 gear T4 aluminum, 57 teeth, 1 gear CRES type 303, 38 teeth	542 4662 003
MP34	SPRING, EXTENSION: CRES wire spring temper passivated; 43/64 in. free lg, 0.018 in. wire dia, 22 coils, 0.196 in. OD, 1.06 rate lb per inch, full rd loop ends in line and on center	542 4692 002
MP35	SPRING, EXTENSION: type 302 CRES wire spring temper passivated; 0.0160 in. dia wire, 17-1/2 coils, 0.120 in. OD of spring, 4.2 rate lb per inch, full loop ends in line and on center	542 5255 002
MP36	DISK, CLUTCH: 301 CRES, 0.937 in. OD, 0.312 in. ID by 0.250 in. ID, 3 grooves 1/16 in. w spaced 120° apart	542 4525 002
MP37	SPRING, CLUTCH: beryllium copper 0.750 in. OD, 0.328 in. ID	542 4523 002
MP38	BEARING: porous bronze 0.1875 in. ID, 0.171 in. lg	542 4607 002
P1	CONNECTOR, RECEPTACLE ELECTRICAL: pin insert; subminiature; 36 pin contacts and 2 miniature female coaxial contacts	371 0098 00
P2	CONNECTOR, PLUG ELECTRICAL: 1 female contact; straight shape	357 9392 00
P3	CONNECTOR, PLUG ELECTRICAL: same as P2	357 9392 00
P4	CONNECTOR, PLUG ELECTRICAL: same as P2	357 9392 00
P5	CONNECTOR, PLUG ELECTRICAL: 7 contact; panel mtg; pin insert, subminiature plug connector with 1 male and 1 female guide pin; 3 amp current rating	372 1697 00
P6	CONNECTOR, PLUG ELECTRICAL: 14 contact; panel mtg, pin insert, subminiature plug connector w/ 1 male and 1 female guide pin; 3 amp current rating	372 1692 00
R1	RESISTOR, FIXED COMPOSITION: 0.10 megohm p/m 10%, 1/2 w	745 1436 00
R2	RESISTOR, FIXED COMPOSITION: 120 ohms p/m 10%, 1/2 w	745 1314 00
R3	RESISTOR, FIXED COMPOSITION: 2200 ohms p/m 10%, 1/2 w	745 1366 00
R4	RESISTOR, FIXED COMPOSITION: 10 ohms p/m 10%, 1/2 w	745 1268 00
R5	RESISTOR, FIXED COMPOSITION: 1000 ohms p/m 10%, 1/2 w	745 1352 00
R6	RESISTOR, FIXED COMPOSITION: same as R1	745 1436 00
R7	RESISTOR, FIXED COMPOSITION: same as R5	745 1352 00
R8	RESISTOR, FIXED COMPOSITION: 47,000 ohms p/m 10%, 1/2 w	745 1422 00
R9	RESISTOR, FIXED COMPOSITION: same as R1	745 1436 00
R10	RESISTOR, FIXED COMPOSITION: 220 ohms p/m 10%, 1/2 w	745 1324 00
R11	RESISTOR, FIXED COMPOSITION: 8200 ohms p/m 10%, 1/2 w	745 1391 00
R12	RESISTOR, FIXED COMPOSITION: 2200 ohms p/m 10%, 1/2 w	745 1366 00
R13	RESISTOR, FIXED COMPOSITION: same as R1	745 1436 00
R14	RESISTOR, FIXED COMPOSITION: 150 ohms ±10%, 1/2 w	745 1317 00
R15	RESISTOR, FIXED COMPOSITION: 22,000 ohms p/m 10%, 1/2 w	745 1408 00
R16	RESISTOR, FIXED COMPOSITION: same as R3	745 1366 00
R17	RESISTOR, FIXED COMPOSITION: same as R1	745 1436 00
R18	RESISTOR, FIXED COMPOSITION: 0.47 megohm ±10%, 1/2 w	745 1464 00

Receiver 51X-2

ITEM	DESCRIPTION	COLLINS PART NUMBER
R19	RESISTOR, FIXED COMPOSITION: 10,000 ohms p/m 10%, 1/2 w	745 1394 00
R20	RESISTOR, FIXED COMPOSITION: same as R10	745 1324 00
R21	RESISTOR, FIXED COMPOSITION: same as R10	745 1324 00
R22	RESISTOR, FIXED COMPOSITION: same as R8	745 1422 00
R23	RESISTOR, FIXED COMPOSITION: same as R18	745 1464 00
R24	RESISTOR, FIXED COMPOSITION: same as R3	745 1366 00
R25	RESISTOR, FIXED COMPOSITION: same as R5	745 1352 00
R26	RESISTOR, FIXED COMPOSITION: 560 ohms p/m 10%, 1/2 w	745 1342 00
S1	SWITCH SECTION, ROTARY: 1 moving contact, 22 fixed contacts, 1 pole; shorting type	269 1861 00
S2	SWITCH, ROTARY: 1 section, 24 position, 1 pole, 1 moving contact, 23 fixed contacts; nonshorting	542 4730 004
S3	SWITCH, ROTARY: 1 section, 24 position, 1 pole, 1 moving contact, 23 fixed contacts, nonshorting	542 4729 004
S4	SWITCH, ROTARY: 2 section, 20 position, 4 pole, 3 moving contacts, 13 fixed contacts, shorting type coin	269 1859 00
S5	SWITCH SECTION, ROTARY: 1 moving contact, 2 fixed contacts, 1 pole	269 1851 00
S6	SWITCH SECTION, ROTARY: 1 moving contact, 3 fixed contacts, 1 pole	269 1852 00
S7	SWITCH, ROTARY: sectional type; 2 sections, 24 position, 4 pole, 4 moving contacts, 10 fixed contacts; shorting type	269 1857 00
S8	SWITCH SECTION, ROTARY: 2 moving contacts, 3 fixed contacts, 1 pole	269 1860 00
S9	SWITCH, ROTARY: 2 section, 24 position, 4 pole, 4 moving contacts, 16 fixed contacts	269 1858 00
S10	SWITCH, LEAF: dpst; c/o 1 pin switch actuating, plastic; 2 post spacing, aluminum, ID, 0.250 in. lg; 2 switch insulator, nylon; 1 insulator contact stack center, plastic; 0.500 in. lg, 0.280 in. w, 0.156 in. thk; 2 plate retainers, cadmium pl steel; 3 insulator-contact arm, and misc hardware (part of K1)	542 4617 002
S11	SWITCH, LEAF: same as S10 (part of K2)	542 4617 002
TP1	CONNECTOR, RECEPTACLE ELECTRICAL: single rd female contact; straight shape; contact, brass, gold flash-over silver plate	360 0087 00
TP2	CONNECTOR, RECEPTACLE ELECTRICAL: same as TP1	360 0087 00
TP3	INSULATOR, FEEDTHRU: plastic, 0.218 in. OD. 0.041 in. ID, 0.333 in. lg overall undercut 0.287 in. to 0.185 in. OD	306 0418 00
TP4	CONNECTOR, RECEPTACLE ELECTRICAL: same as TP1	360 0087 00
TP5	CONNECTOR, RECEPTACLE ELECTRICAL: same as TP1	360 0087 00
TP6	CONNECTOR, RECEPTACLE ELECTRICAL: same as TP1	360 0087 00
TP7	CONNECTOR, RECEPTACLE ELECTRICAL: same as TP1	360 0087 00
V1	TUBE, ELECTRON: 5654, 7 pin	253 0001 00
V2	TUBE, ELECTRON: 5654, 7 pin	253 0001 00
V3	TUBE, ELECTRON: 5654, 7 pin	253 0001 00
V4	TUBE, ELECTRON: 5670, 9 pin	253 0002 00
V5	TUBE, ELECTRON: 5670, 9 pin	253 0002 00
XV1	SOCKET, TUBE: 7 contact miniature; two 0.125 in. dia mtg holes spaced 0.875 in. c to c; rd shape, phenolic insulation	220 1273 00
XV2	SOCKET, TUBE: same as XV1	220 1273 00
XV3	SOCKET, TUBE: same as XV1	220 1273 00
XV4	SOCKET, ELECTRON TUBE: 9 contact miniature; copper nonmagnetic alloy contacts, plated; phenolic insulation	220 1244 00
XV5	SOCKET, ELECTRON TUBE: same as XV4	220 1244 00
Y1	CRYSTAL UNIT QUARTZ: 10.525 mc freq	290 8381 00
Y2	CRYSTAL UNIT QUARTZ: 10.575 mc freq	290 8382 00
Y3	CRYSTAL UNIT QUARTZ: 10.625 mc freq	290 8383 00
Y4	CRYSTAL UNIT QUARTZ: 10.675 mc freq	290 8384 00
Y5	CRYSTAL UNIT QUARTZ: 10.725 mc freq	290 8385 00
Y6	CRYSTAL UNIT QUARTZ: 10.775 mc freq	290 8386 00
Y7	CRYSTAL UNIT QUARTZ: 10.825 mc freq	290 8387 00
Y8	CRYSTAL UNIT QUARTZ: 10.875 mc freq	290 8388 00
Y9	CRYSTAL UNIT QUARTZ: 10.925 mc freq	290 8389 00
Y10	CRYSTAL UNIT QUARTZ: 10.975 mc freq	290 8390 00
Y11	CRYSTAL UNIT QUARTZ: 11.025 mc freq	290 8391 00
Y12	CRYSTAL UNIT QUARTZ: 11.075 mc freq	290 8392 00
Y13	CRYSTAL UNIT QUARTZ: 11.125 mc freq	290 8393 00
Y14	CRYSTAL UNIT QUARTZ: 11.175 mc freq	290 8394 00
Y15	CRYSTAL UNIT QUARTZ: 11.225 mc freq	290 8395 00
Y16	CRYSTAL UNIT QUARTZ: 11.275 mc freq	290 8396 00
Y17	CRYSTAL UNIT QUARTZ: 11.325 mc freq	290 8397 00
Y18	CRYSTAL UNIT QUARTZ: 11.375 mc freq	290 8398 00
Y19	CRYSTAL UNIT QUARTZ: 11.425 mc freq	290 8399 00
Y20	CRYSTAL UNIT QUARTZ: 11.475 mc freq	290 8400 00
Y21	CRYSTAL UNIT QUARTZ: 48.98750 mc freq	290 8359 00
Y22	CRYSTAL UNIT QUARTZ: 49.98750 mc freq	290 8360 00
Y23	CRYSTAL UNIT QUARTZ: 50.98750 mc freq	290 8361 00
Y24	CRYSTAL UNIT QUARTZ: 51.98750 mc freq	290 8362 00
Y25	CRYSTAL UNIT QUARTZ: 52.98750 mc freq	290 8363 00
Y26	CRYSTAL UNIT QUARTZ: 53.98750 mc freq	290 8364 00
Y27	CRYSTAL UNIT QUARTZ: 54.98750 mc freq	290 8365 00
Y28	CRYSTAL UNIT QUARTZ: 55.98750 mc freq	290 8366 00
Y29	CRYSTAL UNIT QUARTZ: 56.98750 mc freq	290 8367 00
Y30	CRYSTAL UNIT QUARTZ: 57.98750 mc freq	290 8368 00
Y31	CRYSTAL UNIT QUARTZ: 58.98750 mc freq	290 8369 00
Y32	CRYSTAL UNIT QUARTZ: 59.98750 mc freq	290 8370 00
Y33	CRYSTAL UNIT QUARTZ: 60.98750 mc freq	290 8371 00
Y34	CRYSTAL UNIT QUARTZ: 61.98750 mc freq	290 8372 00
Y35	CRYSTAL UNIT QUARTZ: 62.98750 mc freq	290 8373 00
Y36	CRYSTAL UNIT QUARTZ: 63.98750 mc freq	290 8374 00
Y37	CRYSTAL UNIT QUARTZ: 64.98750 mc freq	290 8375 00
Y38	CRYSTAL UNIT QUARTZ: 65.98750 mc freq	290 8376 00
Y39	CRYSTAL UNIT QUARTZ: 66.98750 mc freq	290 8377 00
Y40	CRYSTAL UNIT QUARTZ: 67.98750 mc freq	290 8378 00
Y41	CRYSTAL UNIT QUARTZ: 68.98750 mc freq	290 8379 00
Y42	CRYSTAL UNIT QUARTZ: 69.98750 mc freq	290 8380 00
Z1	TUNER, RADIO FREQUENCY: inductive tuning, 22 channels, 97.975 mc to 139.975 mc freq range	542 4698 004
	I-F AND AUDIO, MODULE A2	
C1	CAPACITOR, ELECTROLYTIC TANTALUM: 0.8 uf p/m 20%, 50 vdcw	184 7158 00
C2	CAPACITOR, FIXED MICA DIELECTRIC: 510 uuf p/m 2%, 300 vdcw	912 0544 00
C3	CAPACITOR, FIXED PAPER DIELECTRIC: 0.22 uf p/m 20%, 100 vdcw	931 4603 00
C4	CAPACITOR, FIXED CERAMIC DIELECTRIC: 50,000 uuf p/m 20%, 100 vdcw	913 3023 00
C5	CAPACITOR, FIXED CERAMIC DIELECTRIC: same as C4	913 3023 00
C6	CAPACITOR, FIXED PAPER DIELECTRIC: 0.10 uf p/m 20%, 200 vdcw	931 4605 00
C7	CAPACITOR, FIXED PAPER DIELECTRIC: 0.10 uf p/m 20%, 200 vdcw	931 1644 00
C8	CAPACITOR, FIXED CERAMIC DIELECTRIC: same as C4	913 3023 00
C9	CAPACITOR, FIXED CERAMIC DIELECTRIC: 2,000 uuf plus 100% minus 20%, 350 vdcw	913 3338 00
C10	CAPACITOR, FIXED CERAMIC DIELECTRIC: 3,000 uuf plus 100% minus 20%, 350 vdcw	913 3339 00
C11	CAPACITOR, FIXED MICA DIELECTRIC: 51 uuf p/m 2%, 500 vdcw	912 0472 00
C12	CAPACITOR, FIXED MICA DIELECTRIC: same as C11	912 0472 00
C13	CAPACITOR, FIXED PAPER DIELECTRIC: 1.0 uf p/m 20%, 200 vdcw	951 0179 00
C14	CAPACITOR, FIXED CERAMIC DIELECTRIC: same as C9	913 3338 00
C15	CAPACITOR, FIXED PAPER DIELECTRIC: 0.22 uf p/m 20%, 100 vdcw	931 5744 00
C16	CAPACITOR, FIXED CERAMIC DIELECTRIC: same as C4	913 3023 00
C17	CAPACITOR, ELECTROLYTIC TANTALUM: same as C1	184 7158 00
C18	CAPACITOR, ELECTROLYTIC TANTALUM: 5 uf plus 75% minus 15%, 25 vdcw	184 7152 00
C19	CAPACITOR, FIXED MICA DIELECTRIC: 2400 uuf p/m 10%	935 5089 00
C20	CAPACITOR, FIXED CERAMIC DIELECTRIC: same as C4	913 3023 00
C21	CAPACITOR, FIXED CERAMIC DIELECTRIC: 5000 uuf p/m 20%, 100 vdcw	913 3020 00
C22	CAPACITOR, ELECTROLYTIC TANTALUM: 0.8 uf p/m 20%, 50 vdcw	184 7158 00
C23	CAPACITOR, ELECTROLYTIC TANTALUM: 25 uf p/m 20%, 6 vdcw	184 7023 00
C24	CAPACITOR, ELECTROLYTIC TANTALUM: 40 uf plus 75% minus 15%, 25 vdcw	184 7044 00
C25	CAPACITOR, ELECTROLYTIC TANTALUM: 60 uf plus 75% minus 15%, 15 vdcw	184 7038 00
C26	CAPACITOR, FIXED MICA DIELECTRIC: same as C2	912 0544 00
CR1	SEMICONDUCTOR DEVICE, DIODE: silicon, 1N138B	353 0170 00
CR2	SEMICONDUCTOR DEVICE DIODE: same as CR1	353 0170 00
CR3	SEMICONDUCTOR DEVICE DIODE: germanium, 0.105 in. dia by 2.265 in. lg overall; peak inverse voltage, 35 v, average rectified cur, 70 ma	353 2008 00

Receiver 51X-2

ITEM	DESCRIPTION	COLLINS PART NUMBER
CR4	SEMICONDUCTOR DEVICE DIODE: same as CR1	353 0170 00
CR5	SEMICONDUCTOR DEVICE DIODE: same as CR1	353 0170 00
CR6	SEMICONDUCTOR DEVICE DIODE: same as CR1	353 0170 00
CR7	SEMICONDUCTOR DEVICE DIODE: silicon, 7/32 in. dia by 1-55/64 in. lg overall; 120 ma, 150 mw	353 2551 00
E1	INSULATOR, FEEDTHRU: rd post shape; brass hot tin dipped or electrotinned; 0.350 in. lg overall	306 0324 00
E2	INSULATOR, FEEDTHRU: same as E1	306 0324 00
E3	INSULATOR, FEEDTHRU: same as E1	306 0324 00
E4	INSULATOR, FEEDTHRU: same as E1	306 0324 00
E5	TERMINAL, LUG: phosphor bronze, bent soldering lug; 3/16 in. w by 13/32 in. lg by 0.020 in. thk overall	304 0331 00
E6	INSULATOR, FEEDTHRU: same as E1	306 0324 00
E7	TERMINAL, LUG: phosphor bronze, bent soldering lug, 3/16 in. w by 13/32 in. lg by 0.020 in. thk overall	304 0332 00
E8	INSULATOR, FEEDTHRU: same as E1	306 0324 00
E9	INSULATOR, FEEDTHRU: same as E1	306 0324 00
E10	TERMINAL, FEEDTHRU, INSULATED: brass w/ Teflon insulation; 0.172 in. dia by 0.515 in. lg overall	306 0323 00
E11	TERMINAL, FEEDTHRU, INSULATED: same as E10	306 0323 00
E12	TERMINAL, FEEDTHRU, INSULATED: same as E10	306 0323 00
E13	TERMINAL, FEEDTHRU, INSULATED: same as E10	306 0323 00
E14	INSULATOR, FEEDTHRU: same as E1	306 0324 00
E15	INSULATOR, FEEDTHRU: same as E1	306 0324 00
E16	TERMINAL, FEEDTHRU, INSULATED: same as E10	306 0323 00
E17	TERMINAL, LUG: same as E7	304 0332 00
E18	TERMINAL, LUG: same as E7	304 0332 00
E19	TERMINAL, LUG: same as E7	304 0332 00
E20	INSULATOR, FEEDTHRU: same as E1	306 0324 00
E21	INSULATOR, FEEDTHRU: same as E1	306 0324 00
E22	INSULATOR, FEEDTHRU: same as E1	306 0324 00
E23	INSULATOR, FEEDTHRU: same as E1	306 0324 00
E24	TERMINAL, FEEDTHRU, INSULATED: same as E10	306 0323 00
E25	TERMINAL, FEEDTHRU, INSULATED: same as E10	306 0323 00
E26	TERMINAL, FEEDTHRU, INSULATED: same as E10	306 0323 00
E27	TERMINAL, LUG: same as E7	304 0332 00
E28	TERMINAL, LUG: 0.025 in. thk brass or copper, hot tin dipped or electrotinned	304 0268 00
E29	TERMINAL, LUG: same as E7	304 0332 00
E30	INSULATOR, FEEDTHRU: same as E1	306 0324 00
E31	TERMINAL, LUG: same as E7	304 0332 00
E32	INSULATOR, FEEDTHRU: same as E1	306 0324 00
E33	TERMINAL, LUG: same as E7	304 0332 00
E34	TERMINAL FEEDTHRU, INSULATED: same as E10	306 0323 00
E35	SHIELD ASSEMBLY, TUBE: 7 pin miniature; cylindrical w/ flanged end; open top, brass, 1-3/8 in. lg, 0.810in. ID; mounts directly on tube; incl copper insert	541 6550 003
E36	SHIELD ASSEMBLY, TUBE: same as E35	541 6550 003
E37	SHIELD ASSEMBLY, TUBE: same as E35	541 6550 003
E38	SHIELD ASSEMBLY, TUBE: 9 pin short	541 6553 003
E39	SLEEVE, TUBE SOCKET: for 7 pin tube; cadmium plated copper; 0.005 in. by 13/32 in. by 2-5/16 in.; 7 tabs bent to 40° angle	541 6532 003
E40	SLEEVE, TUBE SOCKET: same as E39	541 6532 003
E41	SLEEVE, TUBE SOCKET: same as E39	541 6532 003
E42	SLEEVE, TUBE SOCKET: cadmium plated copper; 2-25/32 in. lg, 13/32 in. w, 8 tabs bent to 40° angle	541 6533 003
E43	TERMINAL, STUD: double end lug type, brass, silver plated 3/8 in. lg, 5/32 in. dia	306 0193 00
FL1	TRANSFORMER, AUDIO FREQUENCY: pri d-c rating 4 ma, sec d-c rating 1.5 ma; output impedance 20 ohms; power level input 10 mw; 500 rms each winding	673 0394 00
H1	SCREW, CAPTIVE: CRES type 303 passivate finish; 3.546 in. lg, 0.234 in. dia undercut 2.517 in. to 0.109 in. dia, 8-32 NC-2A full thread 0.416 in. lg	542 4496 002
H2	SCREW, TRANSISTOR: copper; 3/8 in. lg w/ 0.051 in. w slot head; 1/4-28 UNF-2A full thread to 1/16 in. of head	542 1348 002
K1	RELAY, ARMATURE: 4 C arrangement; 3 amp contact rating at 28 v d-c or 115 v a-c noninductive; coil voltage 32 v d-c; coil resistance 280 ohms p/m 10%; continuous duty cycle	972 1450 00

ITEM	DESCRIPTION	COLLINS PART NUMBER
L1	COIL, RADIO FREQUENCY: universal wound, 3 or 4 pi; 5.0 uh, no. 40 AWG-SSE insulated copper wire; carbonyl form	240 0312 00
P1	CONNECTOR, RECEPTACLE ELECTRICAL: pin insert, subminiature receptacle connector c/o 20 pin contacts and 1 miniature female coaxial contact; 5 amp	371 0065 00
Q1	TRANSISTOR: germanium; DT4-17, 9/16 in. dia by 13/16 in. lg; 3 amp current; three 0.065 in. dia leads	352 0041 00
R1	RESISTOR, FIXED COMPOSITION: 0.10 megohm p/m 10%, 1/2 w	745 1436 00
R2	RESISTOR, FIXED COMPOSITION: 220 ohms p/m 10%, 1/2 w	745 1324 00
R3	RESISTOR, FIXED COMPOSITION: same as R2	745 1324 00
R4	RESISTOR, FIXED COMPOSITION: 8200 ohms p/m 10%, 1/2 w	745 1391 00
R5	RESISTOR, FIXED COMPOSITION: 680 ohms p/m 10%, 1/2 w	745 1345 00
R6	RESISTOR, FIXED COMPOSITION: same as R2	745 1324 00
R7	RESISTOR, FIXED COMPOSITION: 3300 ohms p/m 10%, 1/2 w	745 1373 00
R8	RESISTOR, FIXED COMPOSITION: 2200 ohms p/m 10%, 1/2 w	745 1366 00
R9	RESISTOR, FIXED COMPOSITION: same as R8	745 1366 00
R10	RESISTOR, FIXED COMPOSITION: same as R1	745 1436 00
R11	RESISTOR, FIXED COMPOSITION: 0.33 megohm p/m 10%, 1/2 w	745 1457 00
R12	RESISTOR, VARIABLE COMPOSITION: 2500 ohms p/m 20%, 1/2 w	380 6286 00
R13	RESISTOR, FIXED COMPOSITION: same as R11	745 1457 00
R14	RESISTOR, FIXED COMPOSITION: 39,000 ohms p/m 10%, 1/2 w	745 1419 00
R15	RESISTOR, FIXED COMPOSITION: 68,000 ohms p/m 10%, 1/2 w	745 1429 00
R16	RESISTOR, FIXED COMPOSITION: 22,000 ohms p/m 10%, 1/2 w	745 1408 00
R17	RESISTOR, FIXED COMPOSITION: 27,000 ohms p/m 10%, 1 w	745 3412 00
R18	RESISTOR, VARIABLE COMPOSITION: 100,000 ohms p/m 20%, 1/2 w	380 6294 00
R19	RESISTOR, FIXED COMPOSITION: 1.5 megohms p/m 10%, 1/2 w	745 1485 00
R20	RESISTOR, FIXED COMPOSITION: same as R7	745 1373 00
R21	RESISTOR, FIXED COMPOSITION: 0.22 megohm p/m 10%, 1/2 w	745 1450 00
R22	RESISTOR, FIXED COMPOSITION: 2.2 megohms p/m 10%, 1/2 w	745 1492 00
R23	RESISTOR, FIXED COMPOSITION: 0.47 megohm p/m 10%, 1/2 w	745 1464 00
R24	RESISTOR, FIXED COMPOSITION: 1000 ohms p/m 10%, 1/2 w	745 1352 00
R25	RESISTOR, FIXED COMPOSITION: 820 ohms ±10%, 1/2 w	745 1349 00
R26	RESISTOR, FIXED COMPOSITION: same as R24	745 1352 00
R27	RESISTOR, FIXED COMPOSITION: same as R1	745 1436 00
R28	RESISTOR, FIXED COMPOSITION: 5600 ohms p/m 10%, 1/2 w	745 1384 00
R29	RESISTOR, FIXED COMPOSITION: 150 ohms p/m 10%, 1 w	745 3317 00
R30	RESISTOR, FIXED COMPOSITION: same as R7	745 1373 00
R31	RESISTOR, FIXED COMPOSITION: 120 ohms p/m 10%, 1 w	745 3314 00
R32	RESISTOR, FIXED COMPOSITION: 1.0 megohm p/m 10%, 1/2 w	745 1478 00
R33	RESISTOR, FIXED COMPOSITION: 10 ohms p/m 10%, 1/2 w	745 1268 00
R34	RESISTOR, FIXED COMPOSITION: same as R33	745 1268 00
R35	RESISTOR, FIXED COMPOSITION: same as R11	745 1457 00
T1	TRANSFORMER, INTERMEDIATE FREQUENCY: 500 kc center freq; shielded; 0.095 in. dia by 0.375 in. lg overall; carbonyl core	278 0283 00
T2	TRANSFORMER, INTERMEDIATE FREQUENCY: same as T1	278 0283 00
T3	TRANSFORMER, INTERMEDIATE FREQUENCY: 500 kc center freq; shielded 0.095 in. dia by 0.375 in. lg overall; 5 terminals; tuning device incl; 2%	278 0284 00
T4	TRANSFORMER, AUDIO FREQUENCY: output type; pri, 200 ohms, 500 rms, 75 ma max d-c; sec, 500 ohms, zero d-c, 150 mw power; freq response from 300 to 3750 cps, shall be within 2.0 db of max	667 0250 00
TB1	TERMINAL BOARD: epoxy laminated board 1-3/4 in. lg by 1-11/16 in. w by 1/16 in. thk w/ fourteen 0.116 in. dia holes for terminals, brass, double end lug terminals 3/32 in. lg by 5/32 in. dia	542 4735 002

Receiver 51X-2

ITEM	DESCRIPTION	COLLINS PART NUMBER
TP1	CONNECTOR, RECEPTACLE ELECTRICAL: single rd female contact; contact brass, gold flashover silver plate; 7/16 in. lg by 0.218 in. dia overall	360 0087 00
TP2	CONNECTOR, RECEPTACLE ELECTRICAL: same as TP1	360 0087 00
TP3	CONNECTOR, RECEPTACLE ELECTRICAL: same as TP1	360 0087 00
TP4	CONNECTOR, RECEPTACLE ELECTRICAL: same as TP1	360 0087 00
TP5	CONNECTOR, RECEPTACLE ELECTRICAL: same as TP1	360 0087 00
TP6	CONNECTOR, RECEPTACLE ELECTRICAL: same as TP1	360 0087 00
TP7	CONNECTOR, RECEPTACLE ELECTRICAL: same as TP1	360 0087 00
TP8	CONNECTOR, RECEPTACLE ELECTRICAL: same as TP1	360 0087 00
V1	ELECTRON, TUBE: 5654	253 0001 00
V2	ELECTRON, TUBE: 5654	253 0001 00
V3	ELECTRON, TUBE: 5654	253 0001 00
V4	ELECTRON, TUBE: 5670	253 0002 00
XK1	SOCKET; 14 contact, top mtg socket; silver plated copper contacts; nickel plated brass mtg plate	220 1166 00
XV1	SOCKET, ELECTRON TUBE: 7 contact miniature	220 1273 00
XV2	SOCKET, ELECTRON TUBE: same as XV1	220 1273 00
XV3	SOCKET, ELECTRON TUBE: same as XV1	220 1273 00
XV4	SOCKET, ELECTRON TUBE: 9 contact miniature; copper nonmagnetic alloy, contacts, plated; phenolic insulation	220 1244 00
	D-C POWER SUPPLY 516B-3, MODULE A3	
C1	CAPACITOR, FIXED ELECTROLYTIC: 60 uf, temperature range minus 40°C to plus 85°C, 200 vdcw	183 0231 00
C2	CAPACITOR, FIXED ELECTROLYTIC: foil, 4.5 uf, plus 75 minus 15%, 50 vdcw	184 7037 00
C3	CAPACITOR, FIXED, PAPER DIELECTRIC: 100 v d-c working, 100,000 uuf p/m 20%; tubular, hermetically sealed metal case, 0.312 in. dia by 13/16 in. lg	931 0496 00
C4	CAPACITOR, FIXED CERAMIC: 0.02 uf +100%, -20%, 500 vdcw	913 2142 00
CR1	RECTIFIER, METALLIC: silicon, single phase, half wave, type 1N539	353 1545 00
OR		
CR1	RECTIFIER, METALLIC: silicon, single phase, half wave, type 1N1695	353 1665 00
CR2	RECTIFIER, METALLIC: same as CR1	353 1545 00 OR 353 1665 00
CR3	SEMICONDUCTOR DEVICE, DIODE: silicon type 1N468	353 2559 00
E1 thru E6	TERMINAL, STUD: brass conductor, 0.172 OD, 0.350 in. lg	306 0324 00
E7	TERMINAL, STUD: brass 0.172 OD, 0.515 in. lg	306 0323 00
E8	TERMINAL, STUD: same as E7	306 0323 00
E9	TERMINAL, LUG: rd tongue end; bronze	304 0317 00
L1	COIL, R-F: choke; not plug-in type; single winding, 4 pi universal wound; unshielded; 400 uh at 1 mc, 3 uuf distributed capacity	240 0023 00
P1	CONNECTOR, RECEPTACLE ELECTRICAL: pin insert, 15 rd male contacts, straight shape	371 0020 00
Q1	TRANSISTOR: germanium; PNP internal configuration; 0.590 in. dia by 0.890 in. lg excl terminals	352 0044 00
Q2	TRANSISTOR: same as Q1	352 0044 00
Q3	TRANSISTOR: same as Q1	352 0044 00
Q4	TRANSISTOR: germanium 0.200 in. ID, 0.360 in. OD, 0.250 in. lg, excl term, 2N398	352 0063 00
R1	RESISTOR, FIXED COMPOSITION: 220 ohms ±10%, 1/2 w	745 1324 00
R2	RESISTOR, FIXED COMPOSITION: 22,000 ohms ±10%, 1/2 w; not used on MOD 1	745 1408 00
R3	RESISTOR, VARIABLE COMPOSITION: 1000 ohms ±20%, 1/2 w	380 6291 00
R4	RESISTOR, FIXED COMPOSITION: 6800 ohms ±10%, 1/2 w	745 1387 00
R5	RESISTOR, FIXED WIRE WOUND: 680 ohms ±10%, 2 w	745 5645 00
R6	RESISTOR, FIXED, COMPOSITION: 2700 ohms ±10%, 1/2 w	745 1370 00
R7	RESISTOR, FIXED, COMPOSITION: 120 ohms ±10%, 1/2 w	745 1314 00
R8	RESISTOR, FIXED, WIRE WOUND: 220 ohms ±5%, 3 w	747 5104 00
R9	RESISTOR, FIXED, COMPOSITION: 270 ohms ±10%, 1 w	745 3328 00
R10	RESISTOR, FIXED, COMPOSITION: same as R9	745 3328 00
TB1	TERMINAL, PLATE: aluminum 0.063 in. thk, 2.656 in. lg by 1.483 in. w	543 3666 003
RT1	RESISTOR, THERMAL: 1000 ohms ±10% at 25°C	714 1562 00
T1	TRANSFORMER: saturable core, single phase, transistorized power supply, freq 1000 to 3000 cps 27.5 v	674 5015 00
	A-C POWER SUPPLY 516A-1, MODULE A4	
C1	CAPACITOR, FIXED ELECTROLYTIC: triple section for d-c circuits; 24 uf plus 50% minus 10%, 200 vdcw ea section	183 0531 00
CR1	SEMICONDUCTOR DEVICE, DIODE: silicon; single phase, half wave; 400 v max peak inverse; type 1N540	353 1546 00
OR		
CR1	SEMICONDUCTOR DEVICE, DIODE: silicon; single phase, half wave; 400 v max peak inverse; type 1N1695	353 1665 00
E1	TERMINAL, STANDOFF: single turret, tapped insert, metal base standoff, brass w/ plastic insulation; 19/32 in. lg, 1/4 in. dia across flats, 4-40 thread 5/32 in. deep	306 0664 00
E2	TERMINAL, STANDOFF: same as E1	306 0664 00
E3	TERMINAL, LUG: rd tongue end; 0.082 in. dia for wire; 0.016 in. by 1/4 in. by 17/32 in.	304 0015 00
E4	LUG, SOLDERING: phosphor bronze electrotinned finish; w/ shakeproof locking hole, 41/64 in. lg, 5/16 in. w overall; for use w/ no. 6 size screw	304 0318 00
H1	SCREW, EXTERNALLY RELIEVED BODY: stainless steel 303 passivate finish; slotted head, 0.234 in. dia by 1.359 in. lg overall; 8-32 NC-2A thd one end, 3/64 in. by 3/64 in. chamfer	541 9729 003
P1	CONNECTOR, RECEPTACLE ELECTRICAL: pin insert, 15 rd male contacts, straight shape	371 0020 00
R1	RESISTOR, FIXED COMPOSITION: 10 ohms ±10%, 1/2 w	745 1268 00
R2	RESISTOR, FIXED COMPOSITION: 120 ohms ±10%, 2 w	745 5614 00
R3	RESISTOR, FIXED COMPOSITION: same as R2	745 5614 00
T1	TRANSFORMER, POWER STEPDOWN: hermetically sealed; fully enclosed frame; metal case; pri 115 v; freq 300 to 1000 cycle; single phase; sec 6.3 v; 1-3/4 in. h, 1-5/16 in. by 1-5/16 in.; 4 solder-hook terminals; two 6-32 NC-2B mtg holes	672 0950 00
	500-KC FILTER, MODULE A5	
C1	CAPACITOR, FIXED CERAMIC: 20 uuf p/m 2.0 uuf, 500 vdcw	913 0236 00
C2	CAPACITOR, FIXED MICA DIELECTRIC: 220 uuf p/m 2%, 500 vdcw	912 0517 00
C3	CAPACITOR, FIXED CERAMIC: 30 uuf p/m 1%, 500 vdcw	928 0612 00
C4	CAPACITOR, FIXED CERAMIC: 50 uuf p/m 1.0 uuf, 500 vdcw	913 0241 00
C5	CAPACITOR, FIXED MICA DIELECTRIC: 470 uuf p/m 2%, 300 vdcw	912 0541 00
C6	CAPACITOR, FIXED CERAMIC: same as C3	928 0612 00
C7	CAPACITOR, FIXED CERAMIC: same as C4	913 0241 00
C8	CAPACITOR, FIXED MICA DIELECTRIC: same as C5	912 0541 00
C9	CAPACITOR, FIXED CERAMIC: same as C3	928 0612 00
C10	CAPACITOR, FIXED CERAMIC: same as C4	913 0241 00
C11	CAPACITOR, FIXED MICA DIELECTRIC: same as C5	912 0541 00
C12	CAPACITOR, FIXED CERAMIC: same as C3	928 0612 00
C13	CAPACITOR, FIXED CERAMIC: same as C4	913 0241 00
C14	CAPACITOR, FIXED MICA DIELECTRIC: same as C5	912 0541 00
C15	CAPACITOR, FIXED CERAMIC: same as C3	928 0612 00
C16	CAPACITOR, FIXED CERAMIC: same as C4	913 0241 00
C17	CAPACITOR, FIXED MICA DIELECTRIC: same as C5	912 0541 00
C18	CAPACITOR, FIXED CERAMIC: same as C3	928 0612 00
C19	CAPACITOR, FIXED CERAMIC: same as C4	913 0241 00
C20	CAPACITOR, FIXED MICA DIELECTRIC: same as C5	912 0541 00
C21	CAPACITOR, FIXED CERAMIC: same as C3	928 0612 00

Receiver 51X-2

ITEM	DESCRIPTION	COLLINS PART NUMBER
C22	CAPACITOR, FIXED CERAMIC: same as C4	913 0241 00
C23	CAPACITOR, FIXED MICA DIELECTRIC: same as C5	912 0541 00
C24	CAPACITOR, FIXED CERAMIC: same as C3	928 0612 00
C25	CAPACITOR, FIXED CERAMIC: same as C1	913 0236 00
C26	CAPACITOR, FIXED MICA DIELECTRIC: same as C2	912 0517 00
J1	CONNECTOR, RECEPTACLE ELECTRICAL: 1 rd male contact; 500 v d-c, low loss plastic dielectric; straight shape, bayonet latch-type locking	357 9215 00
J2	CONNECTOR, RECEPTACLE ELECTRICAL: same as J1	257 9215 00
L1	COIL, RADIO FREQUENCY: 370 uh inductance, 115 min Q, variable; 10-44 Litz wire; 0.525 in. dia by 1/2 in. h excl terminals	278 0253 00
L2	COIL, RADIO FREQUENCY: 175 uh inductance, 130 min Q, variable; 15-44 Litz wire; 0.525 in. dia by 1/2 in. h excl terminals	278 0252 00
L3	COIL, RADIO FREQUENCY: same as L2	278 0252 00
L4	COIL, RADIO FREQUENCY: same as L2	278 0252 00
L5	COIL, RADIO FREQUENCY: same as L2	278 0252 00
L6	COIL, RADIO FREQUENCY: same as L2	278 0252 00
L7	COIL, RADIO FREQUENCY: same as L2	278 0252 00
L8	COIL, RADIO FREQUENCY: same as L2	278 0252 00
L9	COIL, RADIO FREQUENCY: same as L1	278 0253 00
	MAIN FRAME, MODULE A6	
C1	CAPACITOR, FIXED ELECTROLYTIC: dual section, 50 uf plus 50% minus 10%, 200 vdcw each section	183 0630 00
C2	CAPACITOR, FIXED ELECTROLYTIC: 100 uuf plus 50% minus 10%, 200 vdcw	183 0580 00
E1	TERMINAL, STUD: brass; 1/2 in. hex by 0.632 in. lg overall	306 0234 00
E2	TERMINAL, STUD: same as E1	306 0234 00
FL1	FILTER: c/o beads and capacitors -Z1	
J1	JACK, TELEPHONE: spring leaf contact; 3 circuit; 25/32 in. dia by 1-21/64 in. lg; one 1/4 in. dia by 1-1/16 in. approx lg plug accommodated	358 0007 00
J2	CONNECTOR, RECEPTACLE ELECTRICAL: socket insert, subminiature; c/o 36 socket contacts and 2 miniature male coaxial contacts	371 0099 00
J3	CONNECTOR, RECEPTACLE ELECTRICAL: socket insert, subminiature; c/o 20 socket contacts and 1 miniature male coaxial contact	371 0066 00
J4	CONNECTOR, RECEPTACLE ELECTRICAL: socket insert, 15 rd female contacts, 5 amp straight shape	371 0041 00
P1	CONNECTOR, RECEPTACLE ELECTRICAL: pin insert, miniature, c/o 28 pin contacts and 1 female coaxial contact; accommodates no. 20 AWG wire; 5 amp	370 2097 00
P2	CONNECTOR, PLUG ELECTRICAL: 1 rd female contact, angle shape	357 9393 00
P3	CONNECTOR, PLUG ELECTRICAL: 1 female contact r-f type; straight shape; bayonet lock	357 9392 00
R1	RESISTOR, VARIABLE COMPOSITION: 10,000 ohms p/m 20%, 1/2 w	380 6292 00
R2	NOT USED	
R3	RESISTOR, FIXED WIREWOUND: 4.3 ohms p/m 3.0%, 2 w	747 9967 00
S1	SWITCH, PUSH: single throw, momentary contact, 1/4 amp, 115 v a-c noninductive, 40 ma, 30 v d-c; molded phenolic; 1/4 in. dia by 1-3/64 in. lg overall; solder-type terminals	260 1294 00
S1	SWITCH, PUSH: double pole, single throw, momentary contact, 1/2 amp 115 v a-c, solder terminals; used on equipments after serial no. 186	260 2595 00
Z1	FILTER, RADIO INTERFERENCE: 500 v d-c, 1 amp, 1000 uuf capacitor; 5/16 in. by 7/16 in. by 7/8 in. overall	241 0235 00

Receiver 51X-2

ITEM	DESCRIPTION	COLLINS PART NUMBER
C22	CAPACITOR, FIXED CERAMIC: same as C4	913 0241 00
C23	CAPACITOR, FIXED MICA DIELECTRIC: same as C5	912 0541 00
C24	CAPACITOR, FIXED CERAMIC: same as C3	928 0612 00
C25	CAPACITOR, FIXED CERAMIC: same as C1	913 0236 00
C26	CAPACITOR, FIXED MICA DIELECTRIC: same as C2	912 0517 00
J1	CONNECTOR, RECEPTACLE ELECTRICAL: 1 rd male contact; 500 v d-c, low loss plastic dielectric; straight shape, bayonet latch-type locking	357 9215 00
J2	CONNECTOR, RECEPTACLE ELECTRICAL: same as J1	257 9215 00
L1	COIL, RADIO FREQUENCY: 370 uh inductance, 115 min Q, variable; 10-44 Litz wire; 0.525 in. dia by 1/2 in. h excl terminals	278 0253 00
L2	COIL, RADIO FREQUENCY: 175 uh inductance, 130 min Q, variable; 15-44 Litz wire; 0.525 in. dia by 1/2 in. h excl terminals	278 0252 00
L3	COIL, RADIO FREQUENCY: same as L2	278 0252 00
L4	COIL, RADIO FREQUENCY: same as L2	278 0252 00
L5	COIL, RADIO FREQUENCY: same as L2	278 0252 00
L6	COIL, RADIO FREQUENCY: same as L2	278 0252 00
L7	COIL, RADIO FREQUENCY: same as L2	278 0252 00
L8	COIL, RADIO FREQUENCY: same as L2	278 0252 00
L9	COIL, RADIO FREQUENCY: same as L1	278 0253 00
	MAIN FRAME, MODULE A6	
C1	CAPACITOR, FIXED ELECTROLYTIC: dual section, 50 uf plus 50% minus 10%, 200 vdcw each section	183 0630 00
C2	CAPACITOR. FIXED ELECTROLYTIC: 100 uuf plus 50% minus 10%, 200 vdcw	183 0580 00
E1	TERMINAL, STUD: brass; 1/2 in. hex by 0.632 in. lg overall	306 0234 00
E2	TERMINAL, STUD: same as E1	306 0234 00
FL1	FILTER: c/o beads and capacitors -Z1	
J1	JACK, TELEPHONE: spring leaf contact; 3 circuit; 25/32 in. dia by 1-21/64 in. lg; one 1/4 in. dia by 1-1/16 in. approx lg plug accommodated	358 0007 00
J2	CONNECTOR, RECEPTACLE ELECTRICAL: socket insert, subminiature; c/o 36 socket contacts and 2 miniature male coaxial contacts	371 0099 00
J3	CONNECTOR, RECEPTACLE ELECTRICAL: socket insert, subminiature; c/o 20 socket contacts and 1 miniature male coaxial contact	371 0066 00
J4	CONNECTOR, RECEPTACLE ELECTRICAL: socket insert, 15 rd female contacts, 5 amp straight shape	371 0041 00
P1	CONNECTOR, RECEPTACLE ELECTRICAL: pin insert, miniature, c/o 28 pin contacts and 1 female coaxial contact; accommodates no. 20 AWG wire; 5 amp	370 2097 00
P2	CONNECTOR, PLUG ELECTRICAL: 1 rd female contact, angle shape	357 9393 00
P3	CONNECTOR, PLUG ELECTRICAL: 1 female contact r-f type; straight shape; bayonet lock	357 9392 00
R1	RESISTOR, VARIABLE COMPOSITION: 10,000 ohms p/m 20%, 1/2 w	380 6292 00
R2	NOT USED	
R3	RESISTOR, FIXED WIREWOUND: 4.3 ohms p/m 3.0%, 2 w	747 9967 00
S1	SWITCH, PUSH: single throw, momentary contact, 1/4 amp, 115 v a-c noninductive, 40 ma, 30 v d-c; molded phenolic; 1/4 in. dia by 1-3/64 in. lg overall; solder-type terminals	260 1294 00
S1	SWITCH, PUSH: double pole, single throw, momentary contact, 1/2 amp 115 v a-c, solder terminals; used on equipments after serial no. 186	260 2595 00
Z1	FILTER, RADIO INTERFERENCE: 500 v d-c, 1 amp, 1000 uuf capacitor; 5/16 in. by 7/16 in. by 7/8 in. overall	241 0235 00

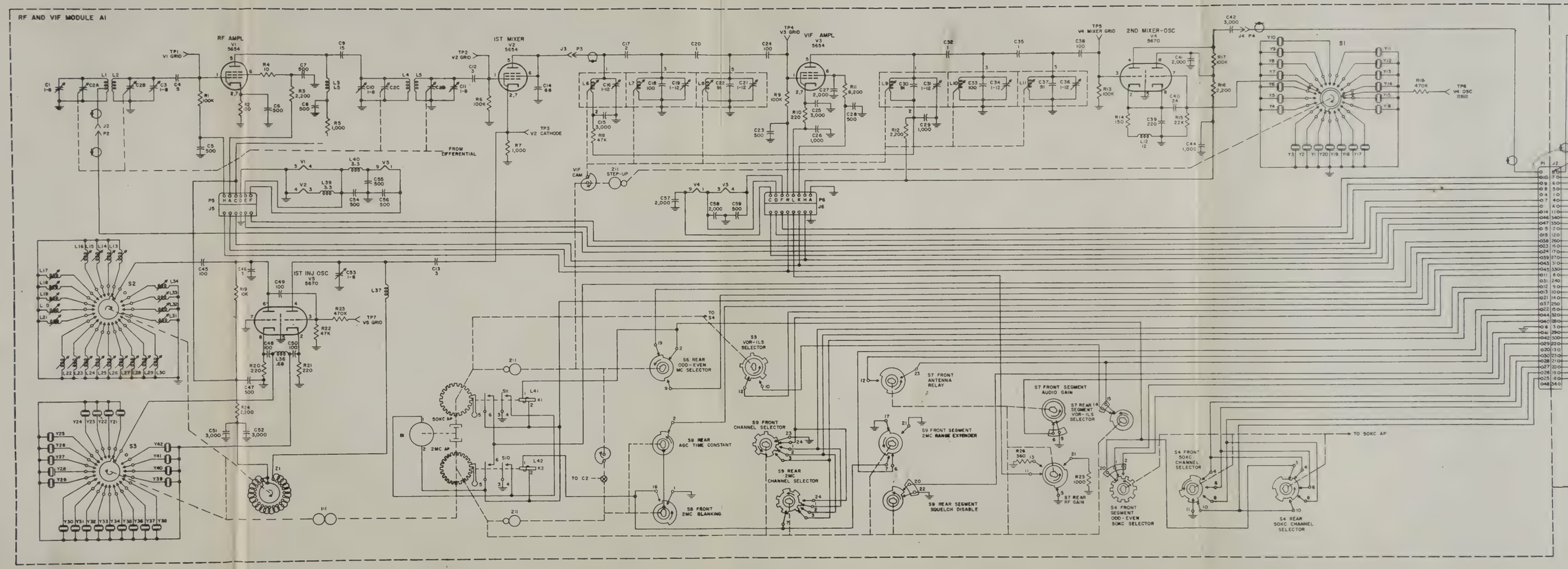
RF AND VIF MODULE A1
RF AMPL
V1
5654
TP1
V1 GRID
IST MIXER
V2
5654
TP2
V2 GRID
TP3
V2 CATHODE
FROM DIFFERENTIAL
VIF AMPL
V3
5654
TP4
V3 GRID
TP5
V4 MIXER GRID
2ND MIXER-OSC
V4
5670
TP6
V4 OSC
S1
VIF CAM
STEP-UP
IST INJ OSC
V5
5670
TP7
V5 GRID
S2
S3
S5
VOR-ILS SELECTOR
S6 REAR
ODD-EVEN
MC SELECTOR
S7 FRONT
ANTENNA RELAY
S7 FRONT SEGMENT
AUDIO GAIN
S7 REAR SEGMENT
VOR-ILS SELECTOR
S7 REAR
RF GAIN
S8 REAR
AGC TIME CONSTANT
S8 FRONT
2MC BLANKING
S9 FRONT
CHANNEL SELECTOR
S9 REAR
2MC
CHANNEL SELECTOR
S9 FRONT SEGMENT
2MC RANGE EXTENDER
S9 REAR SEGMENT
SQUELCH DISABLE
S4 FRONT
SEGMENT
ODD-EVEN
50KC SELECTOR
S4 FRONT
50KC
CHANNEL
SELECTOR
S4 REAR
50KC CHANNEL
SELECTOR
TO 50KC AP
TO S4
TO C2
50KC AP
2 2MC AP

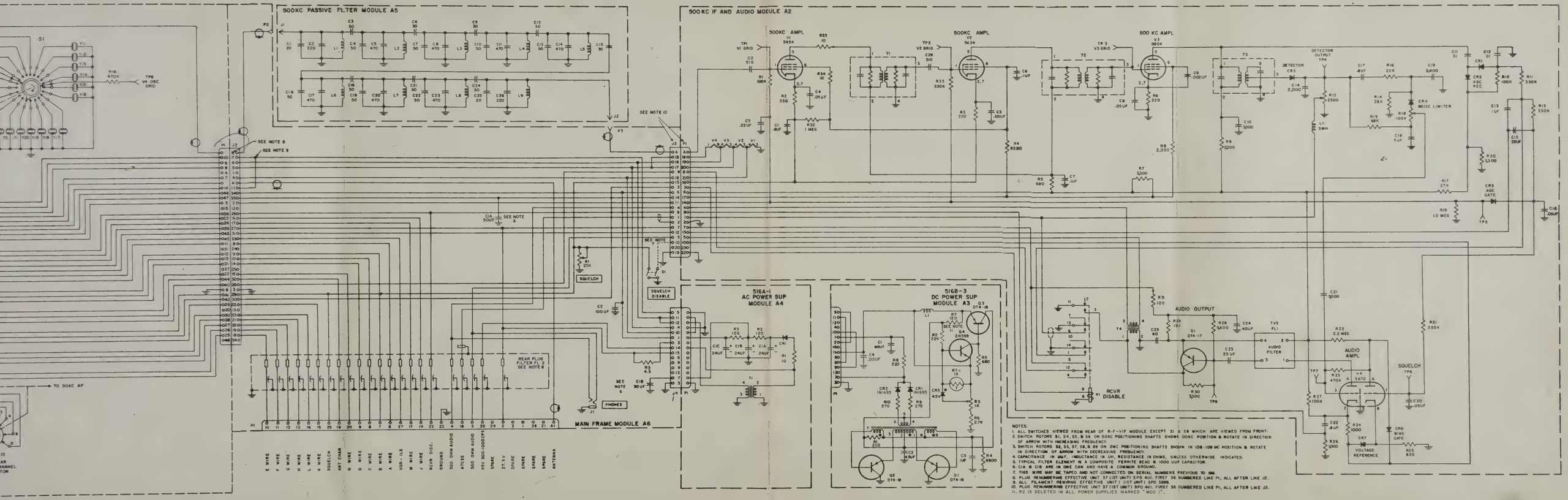

NOTES:

1. ALL SWITCHES VIEWED FROM REAR OF R-F-VIF MODULE EXCEPT S1 & S8 WHICH ARE VIEWED FROM FRONT.
2. SWITCH ROTORS S1, S4, S5, & S6 ON 50KC POSITIONING SHAFTS SHOWN 00KC POSITION & ROTATE IN DIRECTION OF ARROW WITH INCREASING FREQUENCY.
3. SWITCH ROTORS S2, S3, S7, S8, & S9 ON 2MC POSITIONING SHAFTS SHOWN IN 108-109 MC POSITION & ROTATE IN DIRECTION OF ARROW WITH DECREASING FREQUENCY.
4. CAPACITANCE IN MMF, INDUCTANCE IN UH, RESISTANCE IN OHMS, UNLESS OTHERWISE INDICATED.
5. TYPICAL FILTER ELEMENT IS A COMPOSITE FERRITE BEAD & 1000 UUF CAPACITOR.
6. C1A & C1B ARE IN ONE CAN AND HAVE A COMMON GROUND.
7. THIS WIRE MAY BE TAPED AND NOT CONNECTED ON SERIAL NUMBERS PREVIOUS TO 196.
8. PLUG REN UMBERING EFFECTIVE UNIT 37 (1ST UNIT) SPO 4111. FIRST 36 NUMBERED LIKE P1; ALL AFTER LIKE J2.
9. ALL FILAMENT REWIRING EFFECTIVE UNIT 1 (1ST UNIT) SPO 5899.
10. PLUG RENUMBERING EFFECTIVE UNIT 37 (1ST UNIT) SPO 4111. FIRST 36 NUMBERED LIKE P1; ALL AFTER LIKE J3.
11. R2 IS DELETED IN ALL POWER SUPPLIES MARKED "MOD 1".

Figure 8-1. Navigation and Communications Receiver 51X-2, Schematic Diagram

C17
2
16
UP

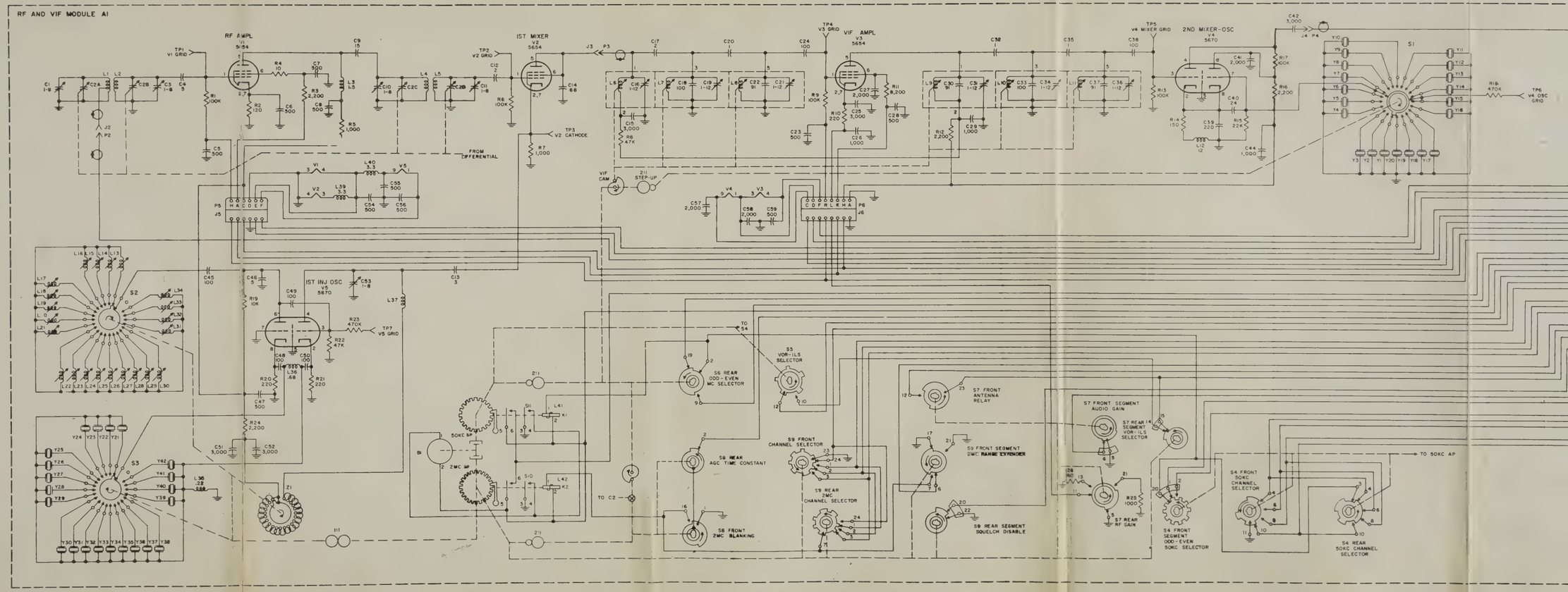
RF AND VIF MODULE A1
RF AMPL
V1
5654
TP1
V1 GRID
IST MIXER
V2
5654
TP2
V2 GRID
TP3
V2 CATHODE
FROM DIFFERENTIAL
VIF AMPL
V3
5654
TP4
V3 GRID
2ND MIXER-OSC
V4
5670
TP5
V4 MIXER GRID
TP6
V4 OSC GRID
S1
IST INJ OSC
V5
5670
TP7
V5 GRID
S2
S3
VIF CAM
Z1 STEP-UP
50KC BP
2 2MC BP
S5
VOR-ILS SELECTOR
S6 REAR
000-EVEN
MC SELECTOR
S8 REAR
AGC TIME CONSTANT
S8 FRONT
2MC BLANKING
S9 FRONT
CHANNEL SELECTOR
S9 REAR
2MC
CHANNEL SELECTOR
S7 FRONT
ANTENNA
RELAY
S9 FRONT SEGMENT
2MC RANGE EXTENDER
S9 REAR SEGMENT
SQUELCH DISABLE
S7 FRONT SEGMENT
AUDIO GAIN
S7 REAR 14 SEGMENT
VOR-ILS
SELECTOR
S7 REAR
RF GAIN
S4 FRONT
000-EVEN
50KC SELECTOR
S4 FRONT
50KC
CHANNEL
SELECTOR
S4 REAR
50KC CHANNEL
SELECTOR
TO 50KC AP
TO S4
TO C2

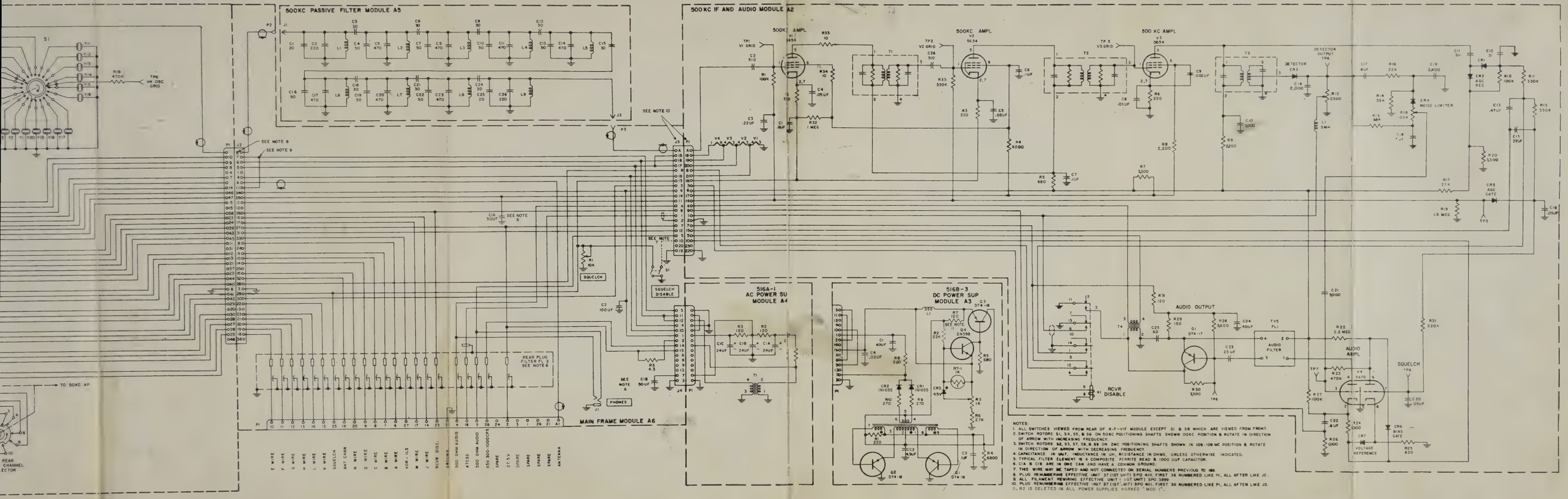

Figure 8-1. Navigation and Communications Receiver 51X-2, Schematic Diagram

Bu.

G Center

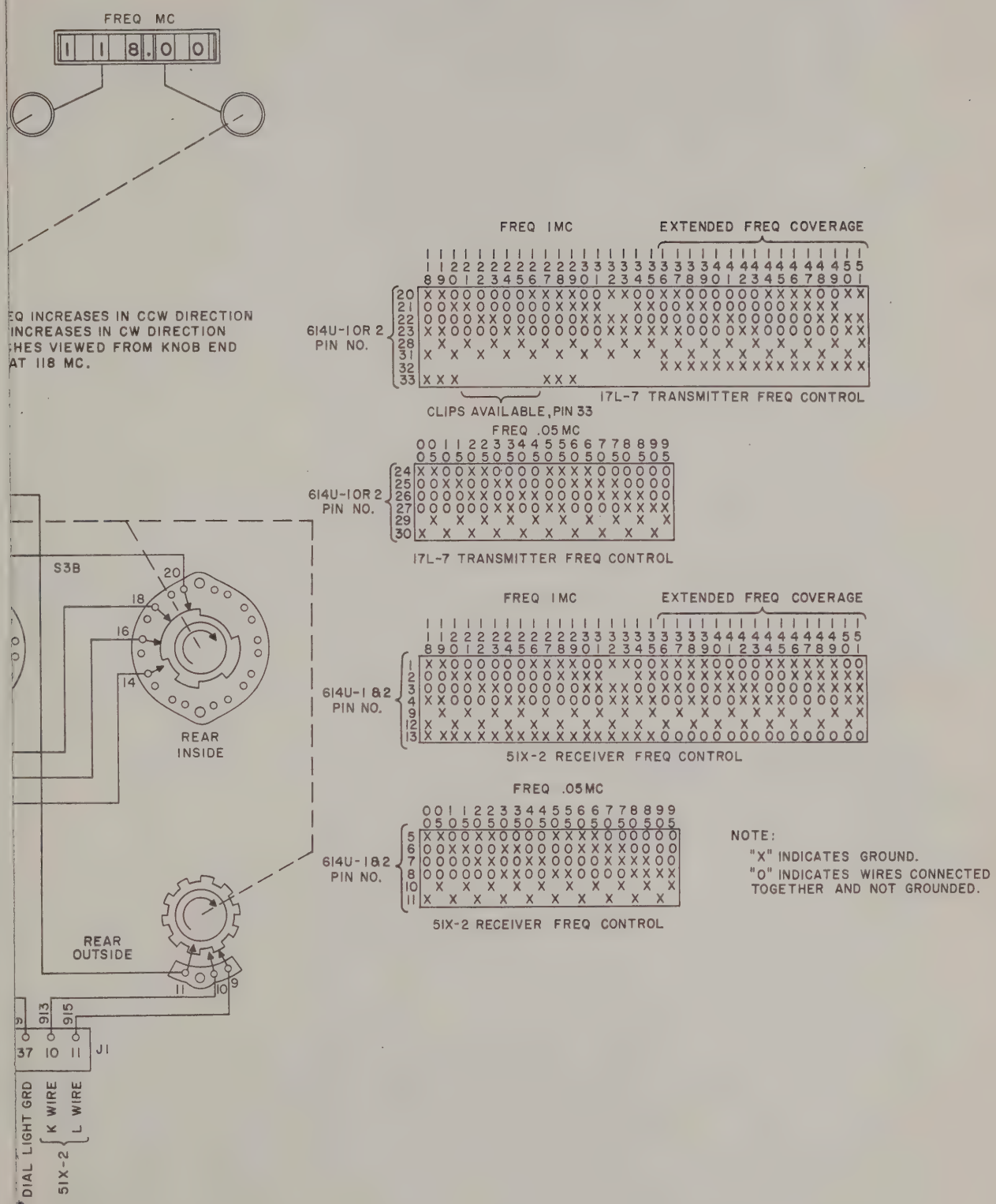

Figure 8-2. Control Unit 614U-1/2, Schematic Diagram

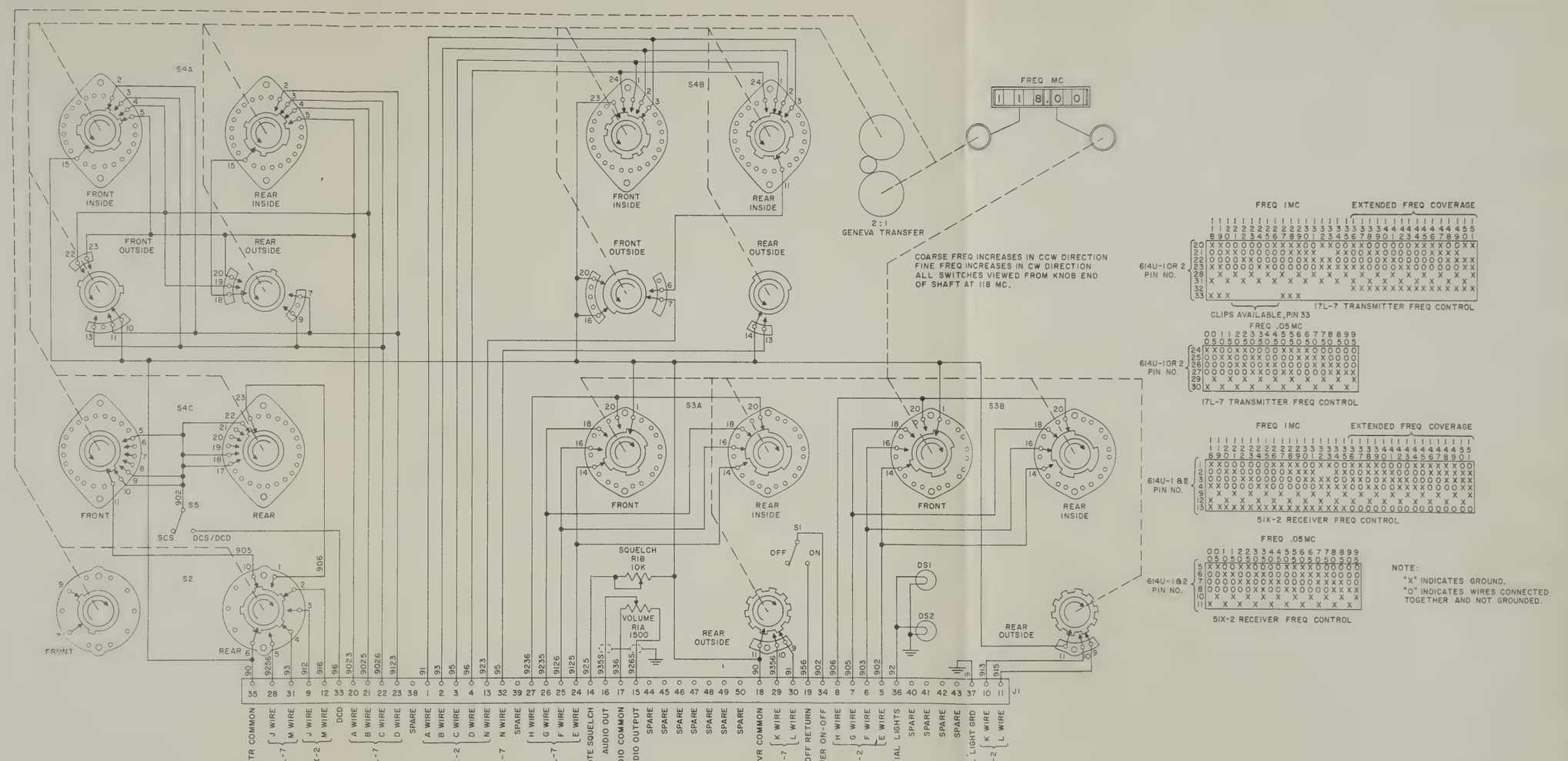

Figure 8-2. Control Unit 614U-1/2, Schematic Diagram

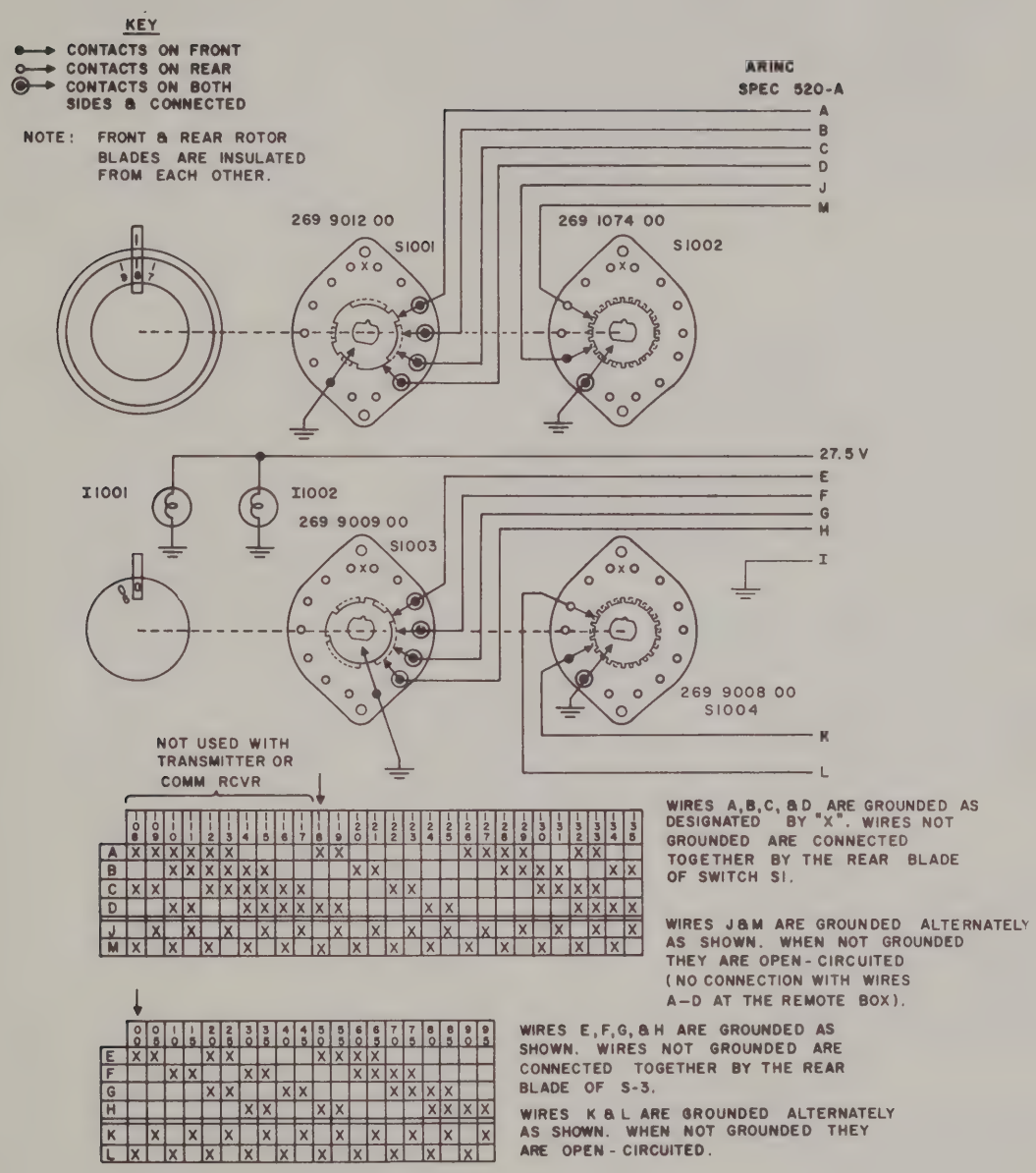

Figure 8-4. Control Unit 614G-1, Schematic Diagram

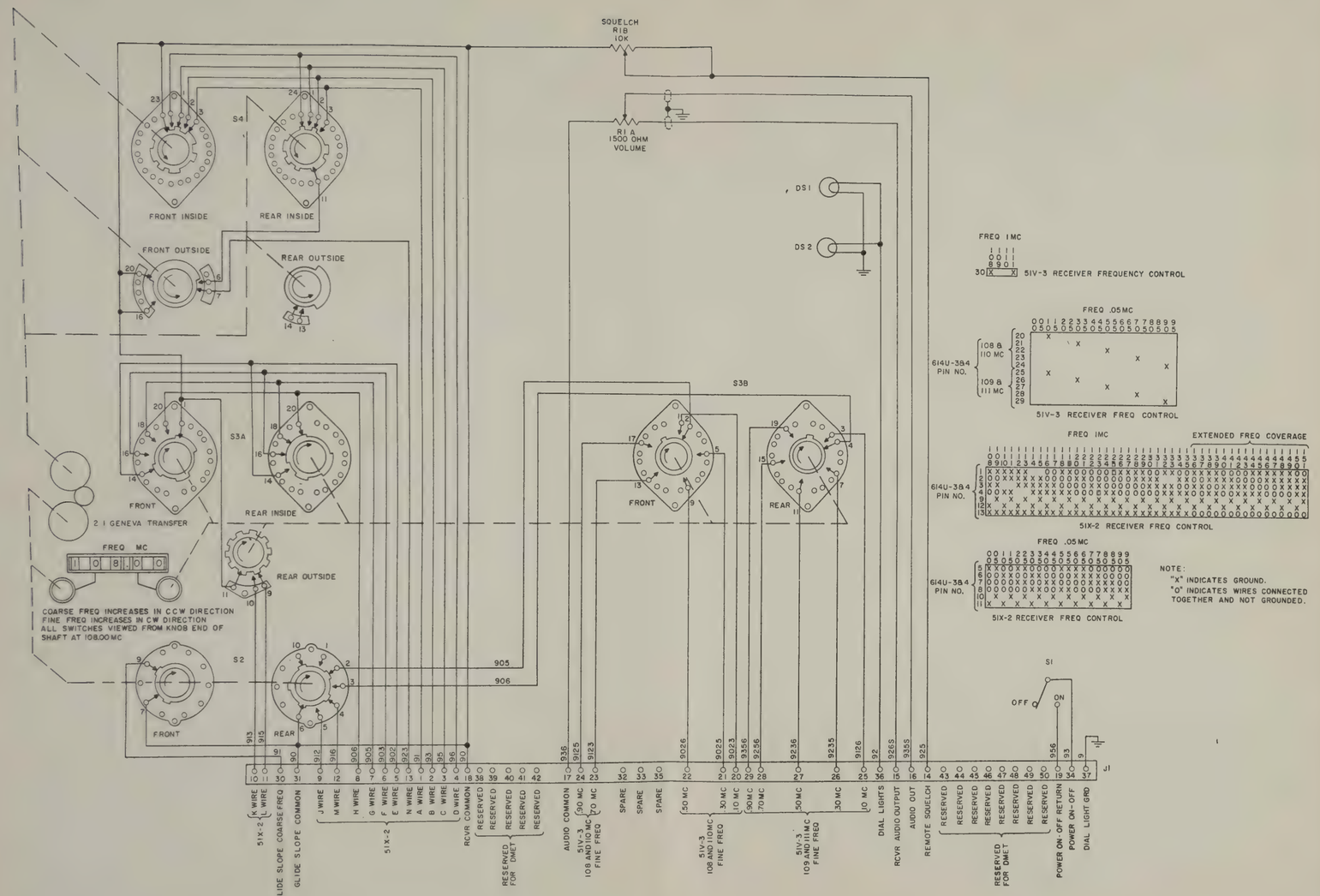

Figure 8-3. Control Unit 614U-3/4, Schematic Diagram

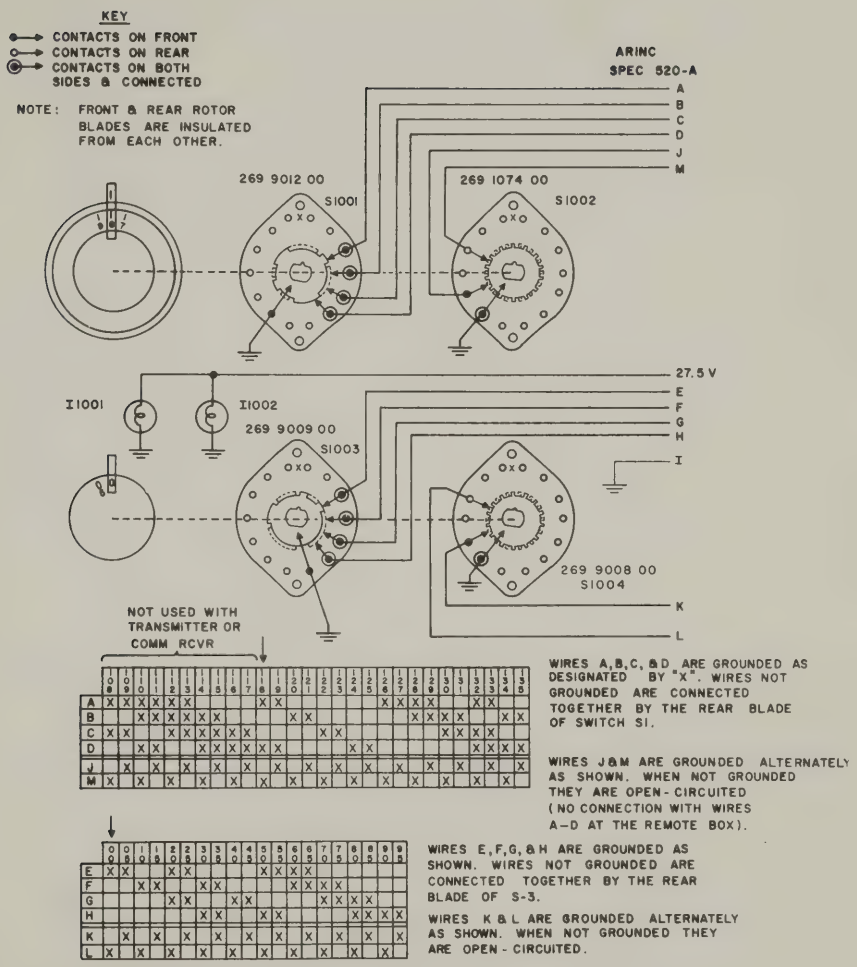

Figure 8-4. Control Unit 614G-1, Schematic Diagram

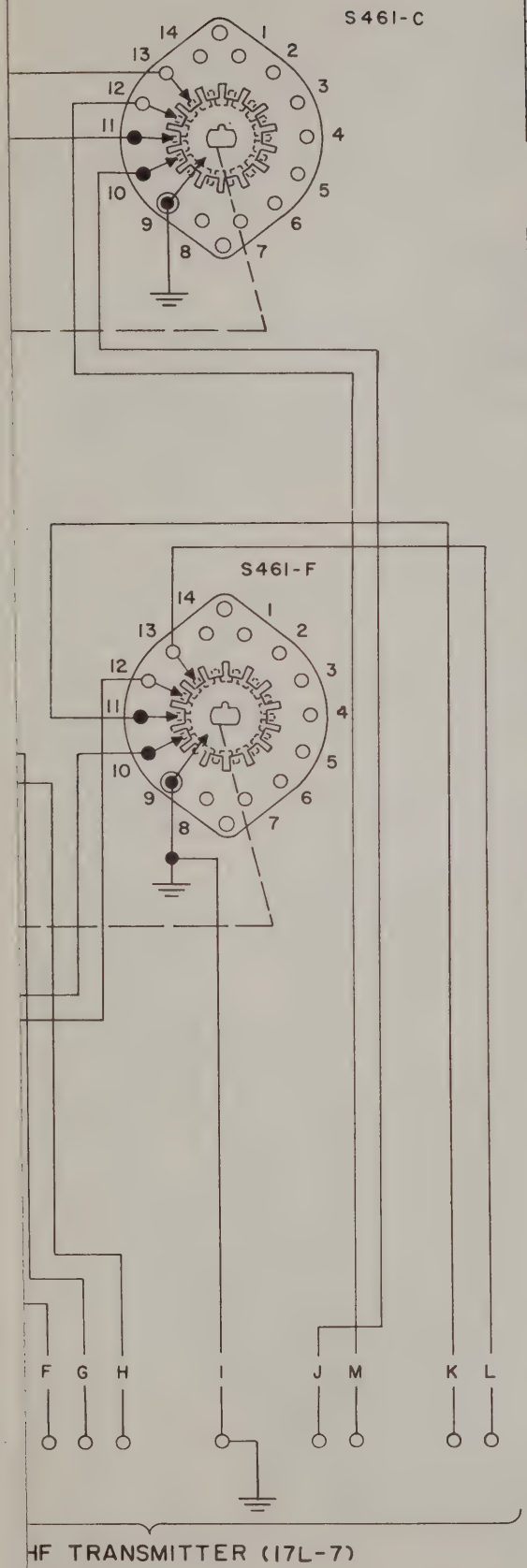

	118	119	120	121	122	123	124	125	126	127	128	129	130	131	132	133	134	135
A	X	X							X	X	X	X			X	X		
B			X	X							X	X	X	X			X	X
C					X	X							X	X	X	X		
D	X	X					X	X							X	X	X	X
J		X		X		X		X		X		X		X		X		X
M	X		X		X		X		X		X		X		X		X	

	00	05	10	15	20	25	30	35	40	45	50	55	60	65	70	75	80	85	90	95
E	X	X			X	X					X	X	X	X						
F			X	X			X	X					X	X	X	X				
G					X	X			X	X					X	X	X	X		
H							X	X			X	X					X	X	X	X
K		X		X		X		X		X		X		X		X		X		X
L	X		X		X		X		X		X		X		X		X		X	

	118	119	120	121	122	123	124	125	126	127	128	129	130	131	132	133	134	135
A	X	X							X	X	X	X			X	X		
B			X	X							X	X	X	X			X	X
C					X	X							X	X	X	X		
D	X	X					X	X							X	X	X	X
J		X		X		X		X		X		X		X		X		X
M	X		X		X		X		X		X		X		X		X	

	00	05	10	15	20	25	30	35	40	45	50	55	60	65	70	75	80	85	90	95
E	X	X			X	X					X	X	X	X						
F			X	X			X	X					X	X	X	X				
G					X	X			X	X					X	X	X	X		
H							X	X			X	X					X	X	X	X
K		X		X		X		X		X		X		X		X		X		X
L	X		X		X		X		X		X		X		X		X		X	

NOTES:
1 "X" INDICATES GROUND. WIRES 1 AND 1 ARE GROUNDED
2 ALL SWITCHES SHOWN IN FRONT VIEW AT 118.0MC POSITION. FREQUENCY INCREASES IN CLOCKWISE DIRECTION.
3 FRONT AND REAR ROTOR BLADES ARE INSULATED FROM EACH OTHER.

KEY:
● → FRONT CONTACTS
○ → REAR CONTACTS
◉ → FRONT AND REAR CONTACTS

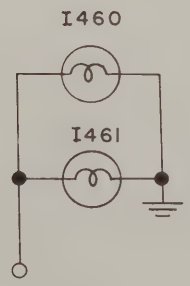

Figure 8-5. Control Unit 614F-1, Schematic Diagram

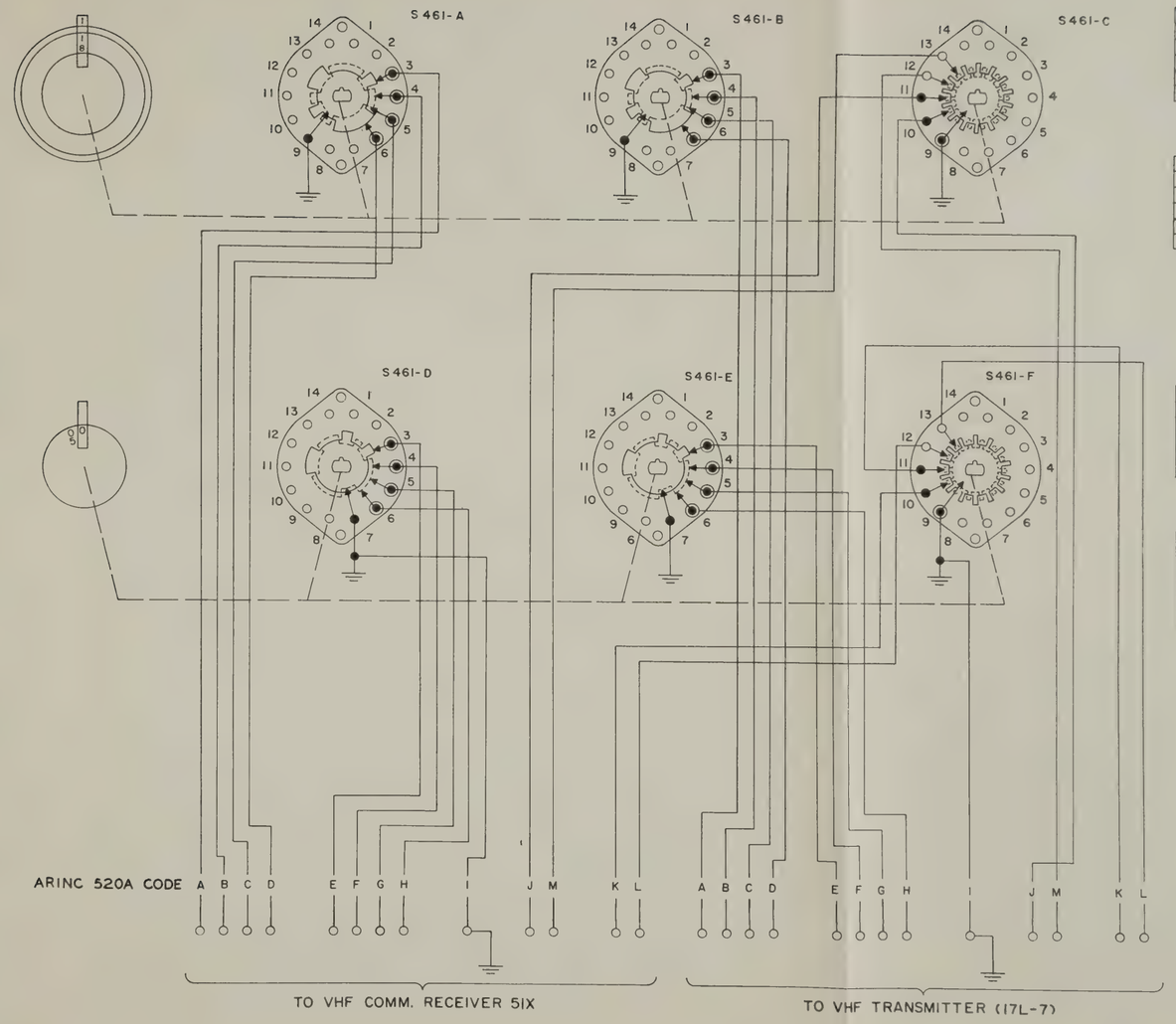

	118	119	120	121	122	123	124	125	126	127	128	129	130	131	132	133	134	135
A	X	X							X	X	X	X			X	X		
B			X	X							X	X	X	X			X	X
C					X	X							X	X	X	X		
D	X	X					X	X							X	X	X	X
J		X		X		X		X		X		X		X		X		X
M	X		X		X		X		X		X		X		X		X	

	00	05	10	15	20	25	30	35	40	45	50	55	60	65	70	75	80	85	90	95
E	X	X			X	X					X	X	X	X						
F			X	X			X	X					X	X	X	X				
G					X	X			X	X					X	X	X	X		
H							X	X			X	X					X	X	X	X
K		X		X		X		X		X		X		X		X		X		X
L	X		X		X		X		X		X		X		X		X		X	

	118	119	120	121	122	123	124	125	126	127	128	129	130	131	132	133	134	135
A	X	X							X	X	X	X			X	X		
B			X	X							X	X	X	X			X	X
C					X	X							X	X	X	X		
D	X	X					X	X							X	X	X	X
J		X		X		X		X		X		X		X		X		X
M	X		X		X		X		X		X		X		X		X	

	00	05	10	15	20	25	30	35	40	45	50	55	60	65	70	75	80	85	90	95
E	X	X			X	X					X	X	X	X						
F			X	X			X	X					X	X	X	X				
G					X	X			X	X					X	X	X	X		
H							X	X			X	X					X	X	X	X
K		X		X		X		X		X		X		X		X		X		X
L	X		X		X		X		X		X		X		X		X		X	

NOTES:
1 "X" INDICATES GROUND. WIRES I AND I ARE GROUNDED
2 ALL SWITCHES SHOWN IN FRONT VIEW AT 118.0MC POSITION. FREQUENCY INCREASES IN CLOCKWISE DIRECTION.
3 FRONT AND REAR ROTOR BLADES ARE INSULATED FROM EACH OTHER.

KEY:
FRONT CONTACTS
REAR CONTACTS
FRONT AND REAR CONTACTS

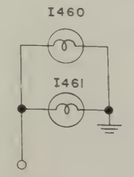

Figure 8-5. Control Unit 614F-1. Schematic Diagram

NOT USED WITH COMM. RECEIVER

	108	109	110	111	112	113	114	115	116	117	118	119	120	121	122	123	124	125	126	127	128	129	130	131	132	133	134	135
A	X	X	X	X	X	X					X	X							X	X	X	X			X	X		
B			X	X	X	X	X	X					X	X							X	X	X	X			X	X
C	X	X			X	X	X	X	X	X					X	X							X	X	X	X		
D			X	X			X	X	X	X	X	X					X	X							X	X	X	X
J		X		X		X		X		X		X		X		X		X		X		X		X		X		X
M	X		X		X		X		X		X		X		X		X		X		X		X		X		X	

	0	05	10	15	20	25	30	35	40	45	50	55	60	65	70	75	80	85	90	95
E	X	X			X	X					X	X	X	X						
F			X	X			X	X					X	X	X	X				
G					X	X			X	X					X	X	X	X		
H							X	X			X	X					X	X	X	X
K		X		X		X		X		X		X		X		X		X		X
L	X		X		X		X		X		X		X		X		X		X	

NOTE: "X" INDICATES GROUND.
WIRES I & I ARE GROUNDED.

NOT USED WITH TRANSMITTER

	108	109	110	111	112	113	114	115	116	117	118	119	120	121	122	123	124	125	126	127	128	129	130	131	132	133	134	135
A	X	X	X	X	X	X					X	X							X	X	X	X			X	X		
B			X	X	X	X	X	X					X	X							X	X	X	X			X	X
C	X	X			X	X	X	X	X	X					X	X							X	X	X	X		
D			X	X			X	X	X	X	X	X					X	X							X	X	X	X
J		X		X		X		X		X		X		X		X		X		X		X		X		X		X
M	X		X		X		X		X		X		X		X		X		X		X		X		X		X	

	0	05	10	15	20	25	30	35	40	45	50	55	60	65	70	75	80	85	90	95
E	X	X			X	X					X	X	X	X						
F			X	X			X	X					X	X	X	X				
G					X	X			X	X					X	X	X	X		
H							X	X			X	X					X	X	X	X
K		X		X		X		X		X		X		X		X		X		X
L	X		X		X		X		X		X		X		X		X		X	

3. FRONT & REAR ROTOR BLADES ARE INSULATED FROM EACH OTHER
2. ALL SWITCHES SHOWN IN FRONT VIEW (FROM KNOB END) AT 118.0 MC POSITION. FREQUENCY INCREASES IN CLOCKWISE DIRECTION.
1. KEY TO SWITCHES –
   - ●→ FRONT CONTACT
   - ○→ REAR CONTACT
   - ◉→ FRONT & REAR CONTACTS ELECTRICALY CONNECTED.

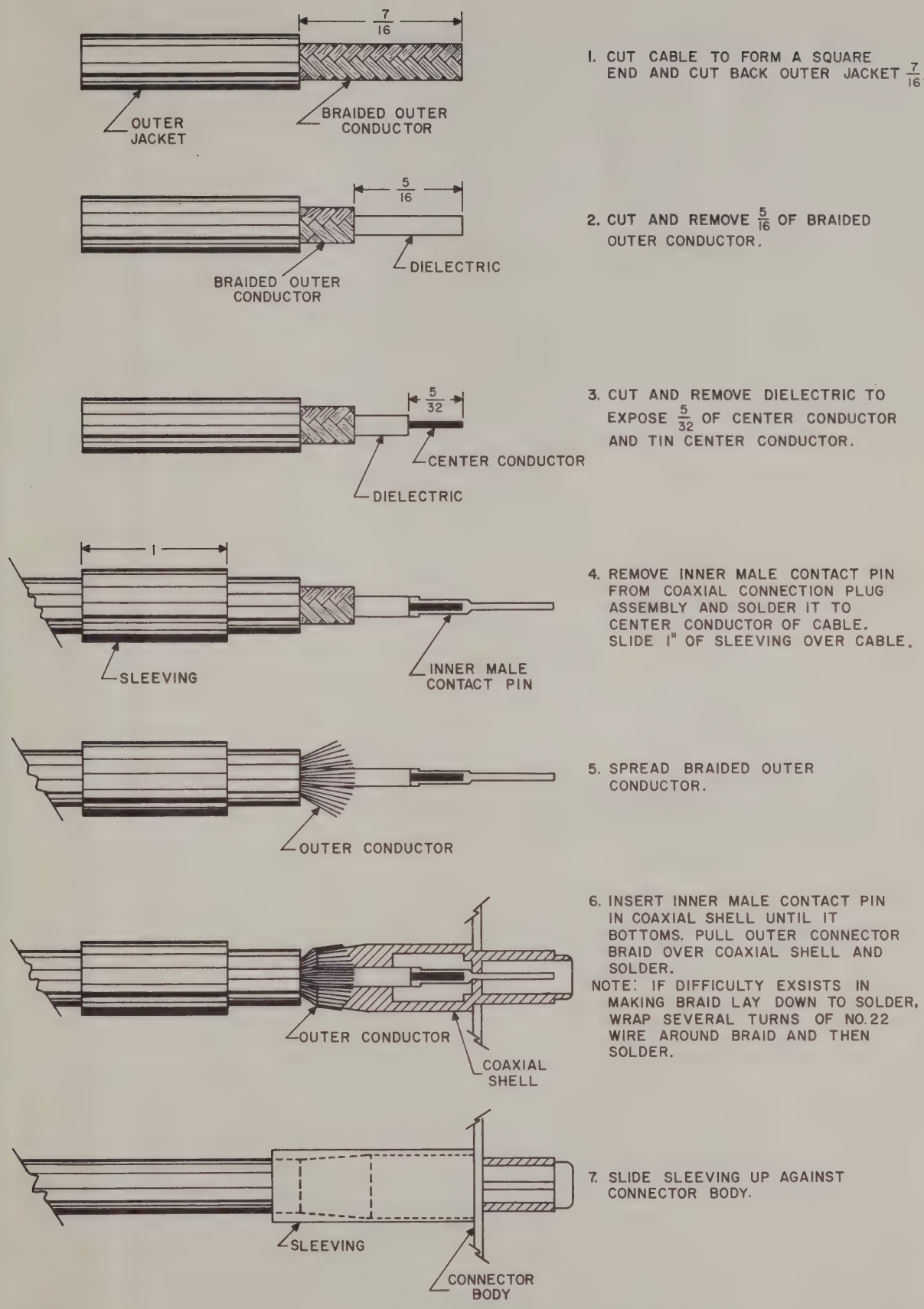

Figure 8-7. Preparation and Connection of RG-58/U or RG-141/U Coaxial Cable to Type DPA Contact

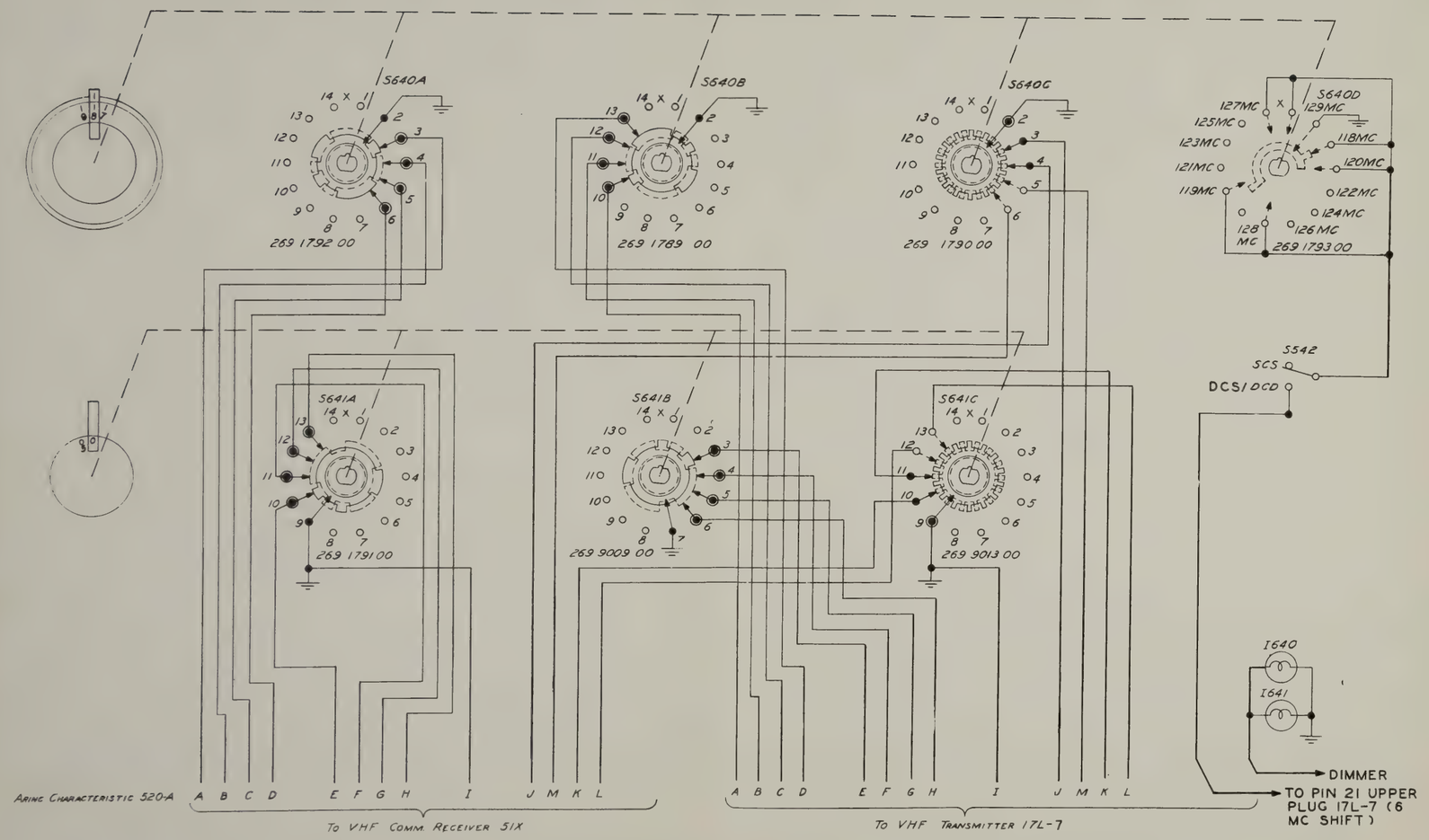

Figure 8-6. Control Unit 614X-1, Schematic Diagram

NOT USED WITH COMM. RECEIVER

	108	109	110	111	112	113	114	115	116	117	118	119	120	121	122	123	124	125	126	127	128	129	130	131	132	133	134	135
A	X	X	X	X	X	X					X	X								X	X	X	X			X	X	
B			X	X	X	X	X	X					X	X								X	X	X	X			X	X
C	X	X			X	X	X	X	X	X					X	X								X	X	X	X		
D			X	X			X	X	X	X	X	X					X	X								X	X	X	X
J		X		X		X		X		X		X		X		X		X		X		X		X			X		X
M	X		X		X		X		X		X		X		X		X		X		X		X		X			X	

	0	05	10	15	20	25	30	35	40	45	50	55	60	65	70	75	80	85	90	95
E	X	X			X	X					X	X	X	X						
F			X	X			X	X				X	X	X	X					
G					X	X			X	X					X	X	X	X		
H							X	X			X	X				X	X	X	X	
K		X		X		X		X		X		X		X		X		X		X
L	X		X		X		X		X		X		X		X		X		X	

NOTE: "X" INDICATES GROUND.
WIRES I & I ARE GROUNDED.

NOT USED WITH TRANSMITTER

	108	109	110	111	112	113	114	115	116	117	118	119	120	121	122	123	124	125	126	127	128	129	130	131	132	133	134	135
A	X	X	X	X	X	X					X	X								X	X	X	X			X	X	
B			X	X	X	X	X	X					X	X								X	X	X	X			X	X
C	X	X			X	X	X	X	X	X					X	X								X	X	X	X		
D			X	X			X	X	X	X	X	X					X	X								X	X	X	X
J		X		X		X		X		X		X		X		X		X		X		X		X			X		X
M	X		X		X		X		X		X		X		X		X		X		X		X		X			X	

	0	05	10	15	20	25	30	35	40	45	50	55	60	65	70	75	80	85	90	95
E	X	X			X	X					X	X	X	X						
F			X	X			X	X				X	X	X	X					
G					X	X			X	X					X	X	X	X		
H							X	X			X	X				X	X	X	X	
K		X		X		X		X		X		X		X		X		X		X
L	X		X		X		X		X		X		X		X		X		X	

3. FRONT & REAR ROTOR BLADES ARE INSULATED FROM EACH OTHER
2. ALL SWITCHES SHOWN IN FRONT VIEW (FROM KNOB END) AT 118.0 MC POSITION. FREQUENCY INCREASES IN CLOCKWISE DIRECTION.
1. KEY TO SWITCHES –
   - ●→ FRONT CONTACT
   - ○→ REAR CONTACT
   - ◉→ FRONT & REAR CONTACTS ELECTRICALY CONNECTED.

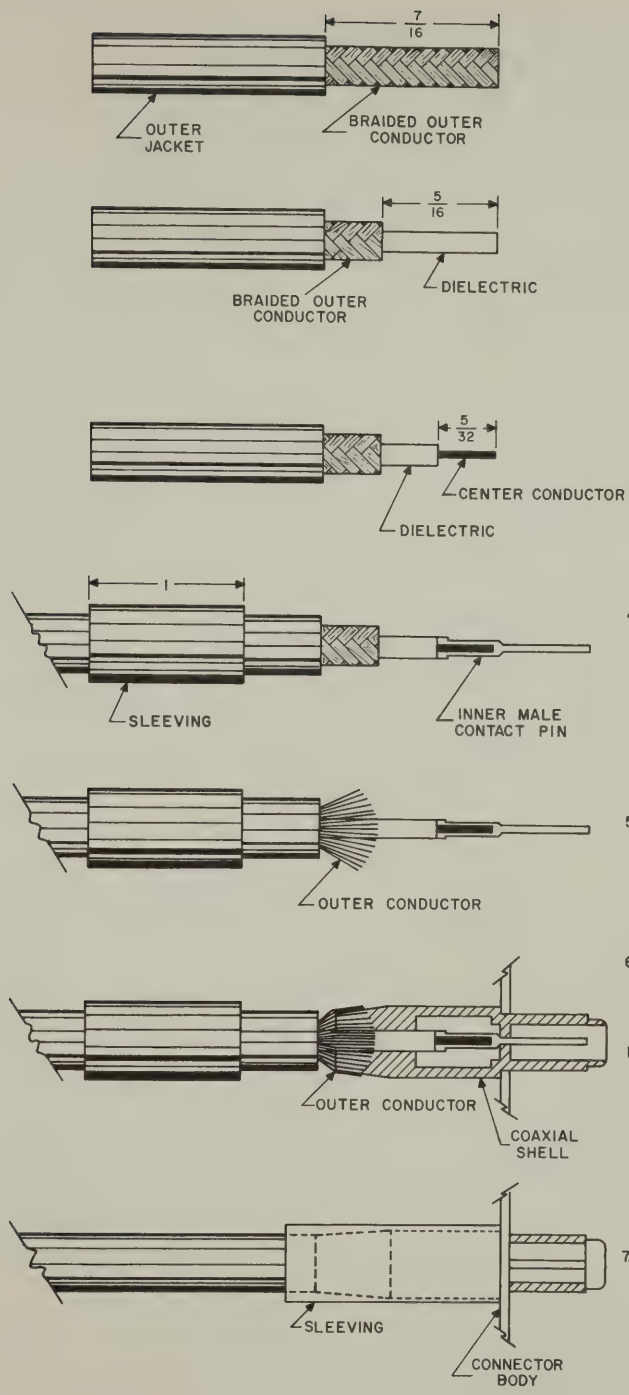

1. CUT CABLE TO FORM A SQUARE END AND CUT BACK OUTER JACKET $\frac{7}{16}$.

2. CUT AND REMOVE $\frac{5}{16}$ OF BRAIDED OUTER CONDUCTOR.

3. CUT AND REMOVE DIELECTRIC TO EXPOSE $\frac{5}{32}$ OF CENTER CONDUCTOR AND TIN CENTER CONDUCTOR.

4. REMOVE INNER MALE CONTACT PIN FROM COAXIAL CONNECTION PLUG ASSEMBLY AND SOLDER IT TO CENTER CONDUCTOR OF CABLE. SLIDE 1" OF SLEEVING OVER CABLE.

5. SPREAD BRAIDED OUTER CONDUCTOR.

6. INSERT INNER MALE CONTACT PIN IN COAXIAL SHELL UNTIL IT BOTTOMS. PULL OUTER CONNECTOR BRAID OVER COAXIAL SHELL AND SOLDER.
NOTE: IF DIFFICULTY EXSISTS IN MAKING BRAID LAY DOWN TO SOLDER, WRAP SEVERAL TURNS OF NO. 22 WIRE AROUND BRAID AND THEN SOLDER.

7. SLIDE SLEEVING UP AGAINST CONNECTOR BODY.

Figure 8-7. Preparation and Connection of RG-58/U or RG-141/U Coaxial Cable to Type DPA Contact

DIRECT CHANNEL		1	2	3	4	5	6	7	8	9	10	11	12	13	14	15	16	17	18
FREQUENCY MC		134.4	134.5	134.6	134.7	134.8	134.9	135.0	135.1	135.2	135.3	135.4	135.5	135.6	135.7	135.8	135.9	108.0	108.1
RESISTANCE IN OHMS ± 1% ACROSS PIN NO	38-39	185	185	185	185	185	185	185	185	185	385	385	385	385	385	385	385	385	385
	41-42	361	611	861	1111	1361	1611	1861	2111	2361	111	361	611	861	1111	1361	1611	1861	2111

DIRECT CHANNEL		22	23	24	25	26	27	28	29	30	31	32	33	34	35	36	37	38	39
FREQUENCY MC		108.5	108.6	108.7	108.8	108.9	109.0	109.1	109.2	109.3	109.4	109.5	109.6	109.7	109.8	109.9	110.0	110.1	110.2
RESISTANCE IN OHMS ± 1% ACROSS PIN NO.	38-39	585	585	585	585	585	585	585	585	785	785	785	785	785	785	785	785	785	785
	41-42	611	861	1111	1361	1611	1861	2111	2361	111	361	611	861	1111	1361	1611	1861	2111	2361

DIRECT CHANNEL		43	44	45	46	47	48	49	50	51	52	53	54	55	56	57	58	59	60
FREQUENCY MC		110.6	110.7	110.8	110.9	111.0	111.1	111.2	111.3	111.4	111.5	111.6	111.7	111.8	111.9	112.0	112.1	112.2	33.3
RESISTANCE IN OHMS ± 1% ACROSS PIN NO.	38-39	985	985	985	985	985	985	985	1185	1185	1185	1185	1185	1185	1185	1185	1185	1185	1185
	41-42	861	1111	1361	1611	1861	2111	2361	111	361	611	861	1111	1361	1611	1861	2111	2361	111

DIRECT CHANNEL		64	65	66	67	68	69	70	71	72	73	74	75	76	77	78	79	80	81
FREQUENCY MC		133.7	133.8	133.9	134.0	134.1	134.2	112.3	112.4	112.5	112.6	112.7	112.8	112.9	113.0	113.1	113.2	113.3	113.4
RESISTANCE IN OHMS ± 1% ACROSS PIN NO.	38-39	1385	1385	1385	1385	1385	1385	1585	1585	1585	1585	1585	1585	1585	1585	1585	1585	1785	1785
	41-42	1111	1361	1611	1861	2111	2361	111	361	611	861	1111	1361	1611	1861	2111	2361	111	361

DIRECT CHANNEL		85	86	87	88	89	90	91	92	93	94	95	96	97	98	99	100	101	102
FREQUENCY MC		113.8	113.9	114.0	114.1	114.2	114.3	114.4	114.5	114.6	114.7	114.8	114.9	115.0	115.1	115.2	115.3	115.4	115.5
RESISTANCE IN OHMS ± 1% ACROSS PIN NO.	38-39	1785	1786	1785	1785	1785	1985	1985	1985	1985	1985	1985	1985	1985	1985	1985	2185	2185	2185
	41-42	1361	1611	1861	2111	2361	111	361	611	861	1111	1361	1611	1861	2111	2361	111	361	611

DIRECT CHANNEL		106	107	108	109	110	111	112	113	114	115	116	117	118	119	120	121	122	123
FREQUENCY MC		115.9	116.0	116.1	116.2	116.3	116.4	116.5	116.6	116.7	116.8	116.9	117.0	117.1	117.2	117.3	117.4	117.5	117.6
RESISTANCE IN OHMS ± 1% ACROSS PIN NO.	38-39	2185	2186	2185	2185	2385	2385	2385	2385	2385	2385	2385	2385	2385	2385	2585	2585	2585	2585
	41-42	1611	1861	2111	2361	111	361	611	861	1111	1361	1611	1861	2111	2361	111	361	611	861

RESISTANCE IN OHMS ± 1% ACROSS PIN NO. 38 & 40 2770
RESISTANCE IN OHMS ± 1% ACROSS PIN NO. 41 & 43 2472

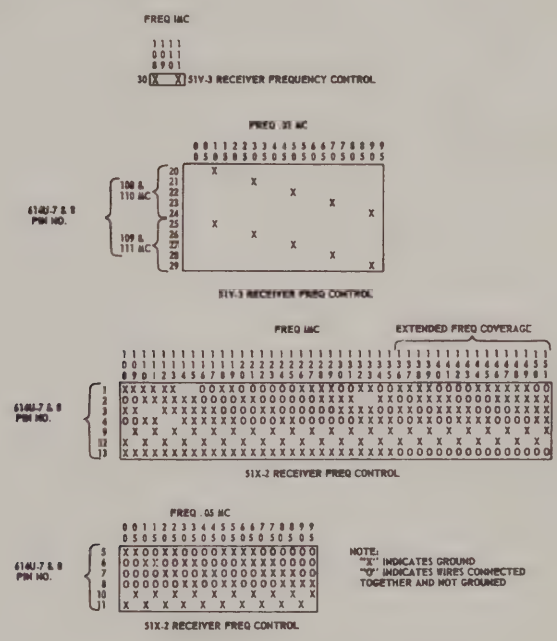

Figure 8-8. Control Units 614U-7/8, Schematic Diagram

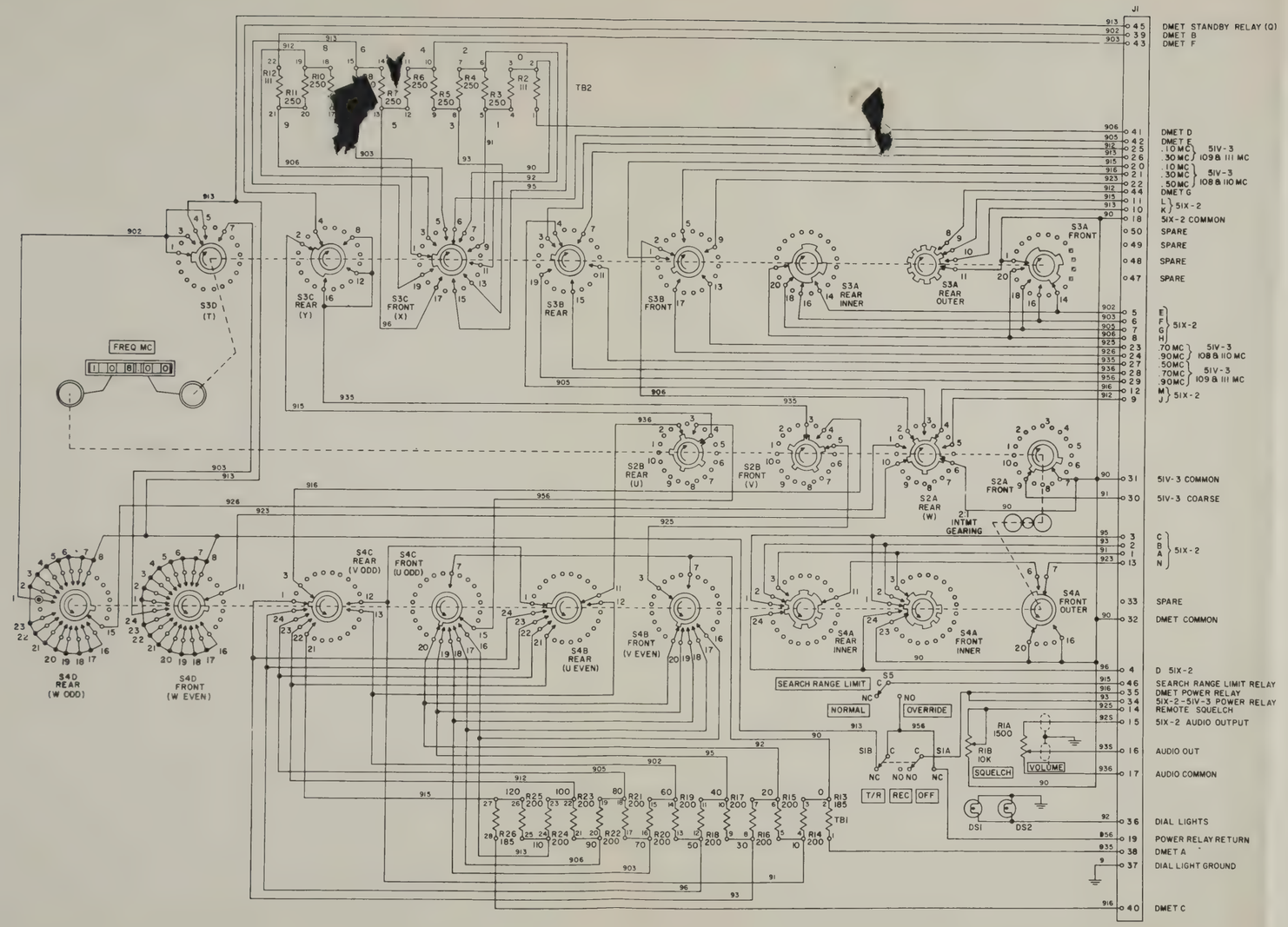

DMET CHANNEL	1	2	3	4	5	6	7	8	9	10	11	12	13	14	15	16	17	18	19	20	21
FREQUENCY MC	134.4	134.5	134.6	134.7	134.8	134.9	135.0	136.1	136.2	136.3	136.4	136.9	137.0	137.1	137.8	137.9	138.0	138.1	138.2	138.3	138.4
RESISTANCE IN OHMS ±1% ACROSS PIN NO	38-39	185	185	185	185	185	185	185	185	380	380	380	380	380	385	385	385	385	385	385	385
	41-42	361	611	861	1111	1361	1611	1861	2111	2361	111	361	611	861	1111	1361	1611	1861	2111	2361	111

DMET CHANNEL	22	23	24	25	26	27	28	29	30	31	32	33	34	35	36	37	38	39	40	41	42
FREQUENCY MC	138.5	138.6	138.7	138.8	138.9	139.0	139.1	139.2	139.3	139.4	139.5	139.6	139.7	139.8	139.9	140.0	140.1	140.2	140.3	140.4	140.5
RESISTANCE IN OHMS ±1% ACROSS PIN NO	38-39	585	585	585	585	585	585	585	785	785	785	785	785	785	785	785	785	785	785	985	985
	41-42	611	861	1111	1361	1611	1861	2111	2361	111	361	611	861	1111	1361	1611	1861	2111	2361	111	361

DMET CHANNEL	43	44	45	46	47	48	49	50	51	52	53	54	55	56	57	58	59	60	61	62	63
FREQUENCY MC	110.6	110.7	110.8	110.9	111.0	111.1	111.2	111.3	111.4	111.5	111.6	111.7	111.8	111.9	112.0	112.1	112.2	112.3	112.4	112.5	112.6
RESISTANCE IN OHMS ±1% ACROSS PIN NO	38-39	985	985	985	985	985	985	985	1185	1185	1185	1185	1185	1185	1185	1185	1185	1185	1185	1385	1385
	41-42	861	1111	1361	1611	1861	2111	2361	111	361	611	861	1111	1361	1611	1861	2111	2361	111	361	611

DMET CHANNEL	64	65	66	67	68	69	70	71	72	73	74	75	76	77	78	79	80	81	82	83	84
FREQUENCY MC	112.7	112.8	112.9	113.0	113.1	113.2	113.3	112.4	112.5	112.6	112.7	112.8	112.9	113.0	113.1	113.2	113.3	113.4	113.5	113.6	113.7
RESISTANCE IN OHMS ±1% ACROSS PIN NO.	38-39	1385	1385	1385	1385	1385	1385	1585	1585	1585	1585	1585	1585	1585	1585	1585	1585	1585	1785	1785	1785
	41-42	1111	1361	1611	1861	2111	2361	111	361	611	861	1111	1361	1611	1861	2111	2361	111	361	611	861

DMET CHANNEL	85	86	87	88	89	90	91	92	93	94	95	96	97	98	99	100	101	102	103	104	105
FREQUENCY MC	113.8	113.9	114.0	114.1	114.2	114.3	114.4	114.5	114.6	114.7	114.8	114.9	115.0	115.1	115.2	115.3	115.4	115.5	115.6	115.7	115.8
RESISTANCE IN OHMS ±1% ACROSS PIN NO	38-39	1785	1785	1785	1785	1985	1985	1985	1985	1985	1985	1985	1985	1985	1985	2185	2185	2185	2185	2185	2185
	41-42	1361	1611	1861	2111	2361	111	361	611	861	1111	1361	1611	1861	2111	2361	111	361	611	861	1111

DMET CHANNEL	106	107	108	109	110	111	112	113	114	115	116	117	118	119	120	121	122	123	124	125	126
FREQUENCY MC	115.9	116.0	116.1	116.2	116.3	116.4	116.5	116.6	116.7	116.8	116.9	117.0	117.1	117.2	117.3	117.4	117.5	117.6	117.7	117.8	117.9
RESISTANCE IN OHMS ±1% ACROSS PIN NO	38-39	2185	2185	2185	2185	2385	2385	2385	2385	2385	2385	2385	2385	2385	2385	2585	2585	2585	2585	2585	2585
	41-42	1611	1861	2111	2361	111	361	611	861	1111	1361	1611	1861	2111	2361	111	361	611	861	1111	1361

RESISTANCE IN OHMS ±1% ACROSS PIN NO 38 & 40 2770
RESISTANCE IN OHMS ±1% ACROSS PIN NO 41 & 42 2472

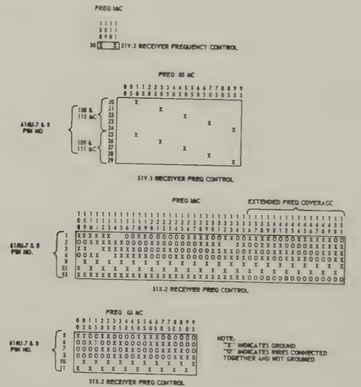

Figure 8-8. Control Units 614U-7/8, Schematic Diagram

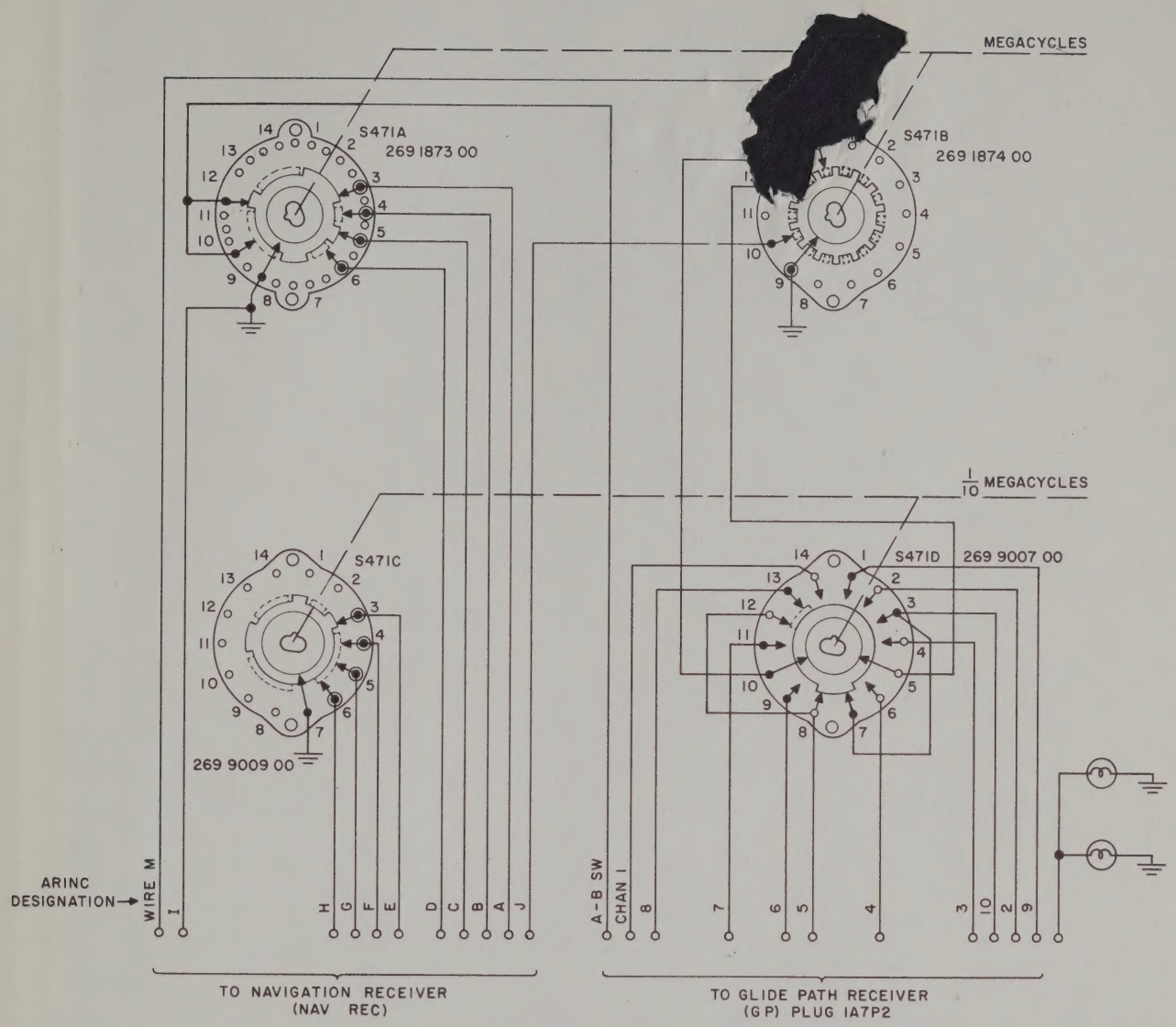

MEGACYCLES

WIRE	108 109	110 111	112 113	114 115	116 117	118 119	120 121	122 123	124 125	126 127	128 129	130 131	132 133	134 135
A	X	X	X		●	X	●	●	●	X	X	●	X	●
B	●	X	X	X	●	●	X	●	●	●	X	X		X
C	X		X	X	X	●	●	X	●	●	●	X	X	●
D	●	X		X	X	X	●	●	X	●	●	●	X	X

MEGACYCLES

WIRE	0	.1	.2	.3	.4	.5	.6	.7	.8	.9
E	X	●	X	●	●	X	X	●	●	●
F	●	X	●	X	●	●	X	X	●	●
G	●	●	X	●	X	●	●	X	X	●
H	●	●	●	X	●	X	●	●	X	X

X INDICATES GROUND
WIRE I IS COMMON GROUND
WIRE J IS GROUNDED ON ODD MEGACYCLES
WIRE A-B IS GROUNDED AT 108 AND 111 MC
WIRE M IS GROUNDED ON EVEN MC

ALL SWITCHES SHOWN IN FRONT VIEW AT 108.0 MC POSITION. FREQUENCY INCREASES IN CLOCKWISE DIRECTION.

○→ REAR CONTACTS
●→ FRONT CONTACTS
⊙→ FRONT & REAR CONTACTS

Figure 8-9. Control Unit 314U-10, Schematic Diagram

54.9875
2
109.9750

HOOK-UP WIRE CODE

The characteristics of the hook-up wire used in this equipment are indicated by groups of symbols on the diagrams. Each symbol group consists of a maximum of three letters followed by a maximum of three numerals. When three letters are used the first indicates the type of wire, the second represents the size of wire, and the third is the letter "S", used only when the wire is shielded. When two letters are used, the first and second letters indicate either the type and size of wire or the [illegible] and shielding, respectively. When one letter is used it indicates the wire size only. The first numer[illegible] the color of the wire body and the second and third numerals, if any, represent the colors of trac[illegible]ls being in accordance with the standard EIA and MIL-W-16878 color code.

The symbols are assigned according to the following table.

TYPE OF WIRE CODE	
LETTER	TYPE OF WIRE
A	Cotton Braid Over Plastic (Formerly AN-J-C-48)
B	Busbar, Round Tinned
C	MIL-W-16878 Type B (#20 and Larger) (600 Volts)
D	Miniature Wire, MIL-W-16878 Type B (#22 and Smaller)
E	
F	Extra Flexible Varnished Cambric
G	
H	Kel-F (Monochlorotrifluoroethylene)
J	
K	Neon Sign Cable (15,000 Volts)
L	Silicone
M	
N	Single Conductor Stranded (Not Rubber Covered)
P	Single Conductor Stranded (Rubber Covered)
Q	
R	MIL-W-16878 Type C (1000 Volts)
T	Teflon, MIL-W-16878 Type E (600 Volts)
V	MIL-W-16878 Type D (3000 Volts)
W	Teflon, MIL-W-16878 Type EE (1000 Volts)
X	
Y	
Z	Acetate Yarn, Telephone Type

SIZE OF WIRE CODE	
LETTER	SIZE
A	#22 AWG
B	#20
C	#18
D	#16
E	#14
F	#12
G	#10
H	#8
J	#6
K	#4
L	#2
M	#1
N	#0
P	#00
Q	#000
R	#0000
T	#28
V	#26
W	#24
X	#19
Y	#30
Z	

COLOR CODE	
NUMBER OR LETTER	COLOR
0	Black
1	Brown
2	Red
3	Orange
4	Yellow
5	Green
6	Blue
7	Violet
8	Gray (Slate)
9	White
a	Clear
b	Tan
c	Pink
d	Maroon
e	Light Green
f	Light Blue

EXAMPLES

MIL TYPE C, #22AWG, UNSHIELDED WIRE, WHITE WITH RED AND GREEN TRACERS:

R	A	9	25	4-1/4
Type of Wire	Size of Wire	Color of Body	Color of Tracers --	Length of Wire in Inches (Includes Stripping & Tinning)

MIL TYPE C, #16AWG, SHIELDED WIRE (SINGLE), WHITE WITH RED AND GREEN TRACERS:

R	D	S	9	25	4-1/4
Type of Wire	Size of Wire	Shielded	Color of Body	Color of Tracers --	Length of Wire in Inches (Includes Stripping & Tinning)

MIL TYPE B, #22AWG, SHIELDED WIRE (MULTIPLE), WHITE, AND WHITE WITH RED TRACER:

D	A	S	(9)	(92)	4-1/4
Type of Wire	Size of Wire	Shielded	First Conductor	Second Conductor --	Length of Wire in Inches (Includes Stripping & Tinning)

COLLINS

COLLINS RADIO COMPANY